USB A plug 90° SMT mount

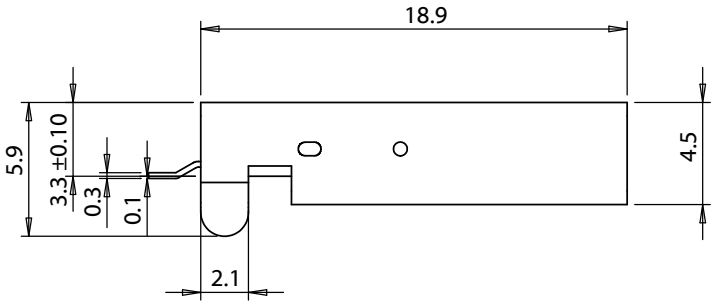

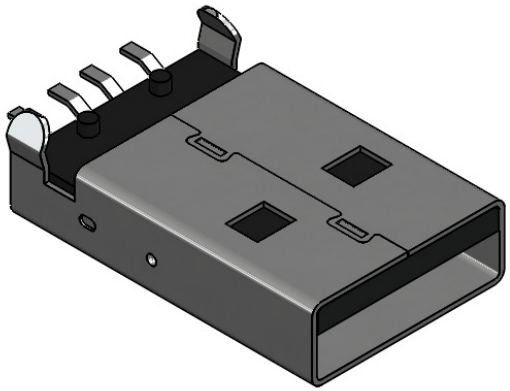

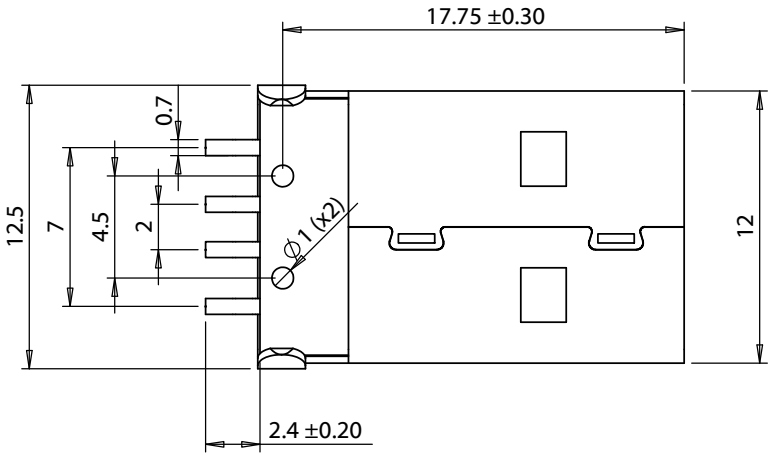

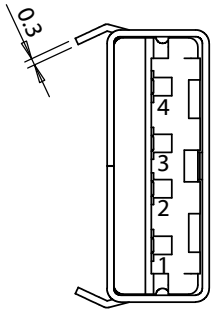

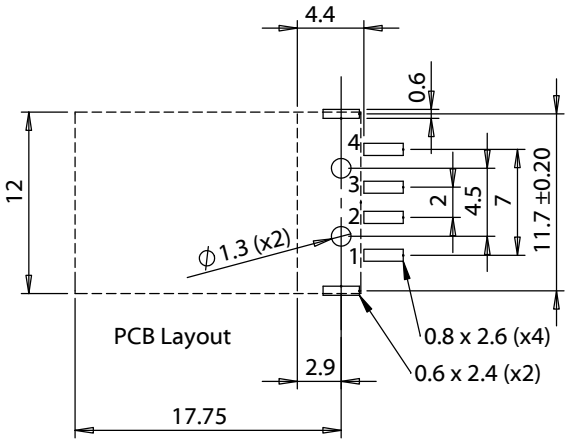

Revision:	Date:	Description:
A	09/28/2015	Initial release
A1	07/27/2018	Corrected operating temp range
A2	9/4/2018	Changed insulator material

Prepared: AG — Digitally signed by AG Date: 2018.09.05 13:59:44 -07'00'

Verified: PS — Digitally signed by PS Date: 2018.09.05 14:02:47 -07'00'

Dimensions are in millimeters.
Tolerances:
X: ± 0.5 mm
X.X: ± 0.3 mm
X.XX: ± 0.05 mm

Notes:

RoHS and REACH compliant

Function test: no open, no short circuit, no intermittent

Description:

Connector, USB A plug, PCB mount, 180°, nickel shell, board lock, black insulator, tray

TENSILITY

tel 1.541.323.3228 *800* 877.670.7118
fax 1.541.323.4202 *web* tensility.com

Size: A

Part number: 54-00011

Scale: 2:1

Sheet 1 of 2

To see a custom version of this cable assembly, call Tensility at 541-323-3228 or email engineering@tensility.com

5 4 3 2 1

USB A plug 90° SMT mount

Materials
1. Shell, steel, nickel plated
2. Pins, brass, 5 µ" gold and tin plating
3. Insulator, PA9T, black

Electrical
Rated voltage: 30 Vdc
Rated current: 3 A
Dielectric strength: 500 Vac for 1 min without damage
Insulation resistance: 500 MΩ after 500 Vdc for 1 min
Contact resistance: 50 mΩ or less

Mechanical
Insertion force: 3.5 kgf maximum
Withdrawal force: 1.0 kgf minimum
Durability: 1500 cycles unloaded, while maintaining:
- Contact resistance: 100 mΩ
- Insulation resistance: 100 MΩ
- Dielectric strength: 100 Vac for 1 min without damage

Terminal strength: 0.3 kgf in any direction for 15 seconds without damage or looseness

Soldering
Solderability: 75% minimum coverage when terminals dipped 2 mm in 255 ±5 °C solder bath for 3 ±0.5 seconds
Solder bath durability: no deformation when immersed in 260 ±5 °C up to surface of the board for 5 seconds or less
Solder iron durability: no deformation when exposed to 350 ±10 °C for 3 ±0.5 seconds

Environmental
Cold test: -40 ±3 °C for 48 hours without deformation
Heat test: 85 ±2 °C for 48 hours without deformation
Humidity test: 40 ±2 °C and humidity between 90 and 98 % for 48 hours without deformation

Operating range
-40 ~ 85 °C

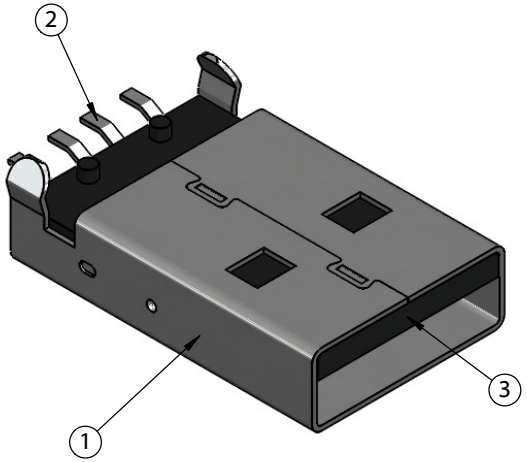

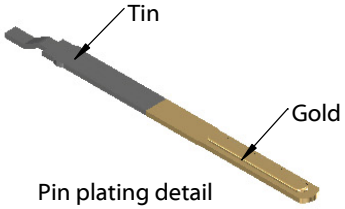

Pin plating detail

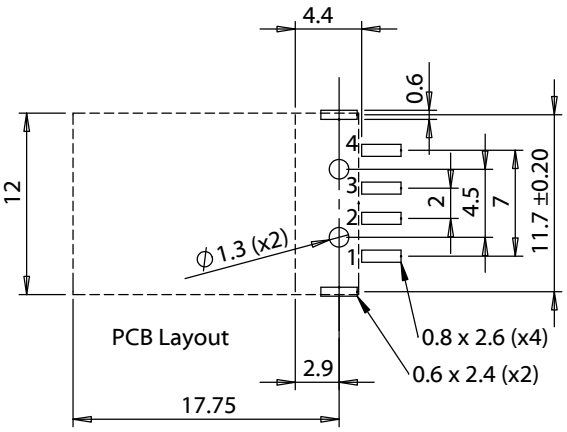

Revision:	Date:	Description:
A	09/28/2015	Initial release
A1	07/27/2018	Corrected operating temp range
A2	9/4/2018	Changed insulator material

Prepared: AG — Digitally signed by AG Date: 2018.09.05 13:59:56 -07'00'

Verified: PS — Digitally signed by PS Date: 2018.09.05 14:02:59 -07'00'

Dimensions are in millimeters.
Tolerances:
X: ± 0.5 mm
X.X: ± 0.3 mm
X.XX: ± 0.05 mm

Notes:
RoHS and REACH compliant

Function test: no open, no short circuit, no intermittent

Description:
Connector, USB A plug, PCB mount, 180°, nickel shell, board lock, black insulator, tray

TENSILITY
tel 1.541.323.3228 *800* 877.670.7118
fax 1.541.323.4202 *web* tensility.com

Size: A
Part number: 54-00011
Scale: 2:1
Sheet 2 of 2

5 4 3 2 1