THE INFORMATION CONTAINED IN THIS DRAWING IS THE SOLE PROPERTY OF L-COM, INC. ANY REPRODUCTION IN PART OR WHOLE WITHOUT THE WRITTEN PERMISSION OF L-COM, INC. IS PROHIBITED.

REVISIONS

REV	DESCRIPTION	DATE	APPROVED
A	REV A DRAWING RELEASED	07/20/2017	SLI
B	ECN 10993: REMOVE -03M LENGTH FROM PART NUMBER TABULATION	02/19/2021	DGUTTADAURO

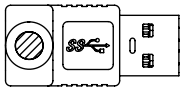

SECTION A-A

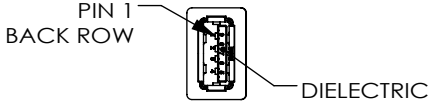

"J1"
USB 3.0 SERIES "A" JACK
CONTACTS 30µ GOLD

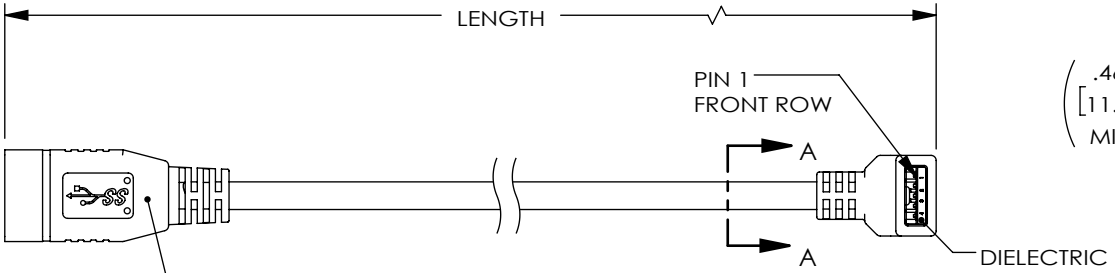

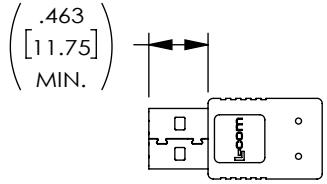

"P1"
USB 3.0 SERIES "A"
UP ANGLE PLUG
CONTACTS 30µ GOLD

"J1" WIRING MAP "P1"

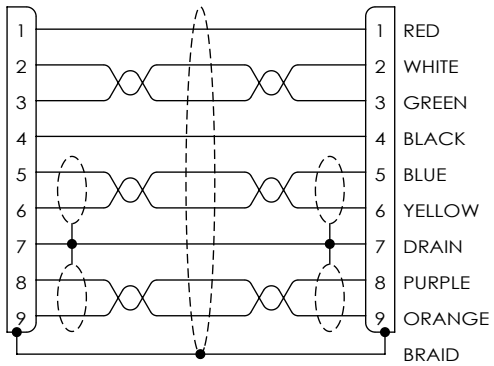

UL STYLE 20276,
(2) TWISTED PAIR, 30AWG WITH
ALUM/POLY FOIL SHIELD AND DRAIN WIRE,
(1) UNSHIELDED TWISTED PAIR, 30AWG,
(2) CONDUCTORS, 24AWG,
OVERALL ALUMINUM/MYLAR AND BRAIDED SHIELD,
JACKET: PVC, BLUE (PANTONE 300C)
(NOM DIA. .217" [5.5])

B

PART NUMBER	LENGTH METERS [FEET]
U3A00046-05M	0.5 [1.64]
U3A00046-075M	0.75 [2.46]
U3A00046-1M	1.0 [3.28]

NOTES:

1. CABLE ASSEMBLY SHALL HAVE 360° SHIELD TERMINATION.
2. CABLE ASSEMBLY MUST MEET USB 3.0 REQUIREMENTS.
3. CABLE ASSEMBLY SHALL BE TESTED FOR CONTINUITY.
4. CABLE ASSEMBLY SHALL BE INDIVIDUALLY PACKAGED IN ACCORDANCE WITH L-COM SPECIFICATION PS-0031.

UNLESS OTHERWISE SPECIFIED, DIMENSIONS ARE IN INCHES [mm]

OVERALL CABLE LENGTH TOLERANCE:
≤12 [305] = +1 [25] / -0
>12 [305] ≤60 [1524] = +2 [51] / -0
>60 [1524] ≤120 [3048] = +4 [102] / -0
>120 [3048] ≤300 [7620] = +6 [152] / -0
>300 [7620] = +5% / -0

ALL OTHER DIMENSIONAL TOLERANCES:
.X = ± .2 [5]
.XX = ± .02 [.5]
.XXX = ± .005 [.13]
FRACTIONS ± 1/32
ANGLES ± 1°

THIRD-ANGLE PROJECTION

APPROVALS	DATE
DRAWN BY SLI	07/20/2017
CHECKED BY BZHANG	07/20/2017
APPROVED BY SPAN	07/20/2017

CONFIGURATION DETAILS OF UNDIMENSIONED FEATURES MAY VARY

COLOR VARIATIONS MAY OCCUR

L-com an INFINITE brand
50 High Street, West Mill,
North Andover, MA 01845 USA.
Phone: 1.800.341.5266
1.978.682.6936

CATEGORY: USB

PRODUCT DESCRIPTION: CA, USB3.0 A-F/90UP A-M

SIZE	CAGE CODE	DWG. NO.	REV.
A	43321	U3A00046	B

SCALE: NONE | CAD FILE: U3A00046.SLDDRW | SHEET 1 OF 1

T-Rev.D