PCB BOARD VERSIONS		
PRODUCT NR:	PCB THICKNESS	DIM "A"
85864-X02LF	1.6	2.90
85864-X12LF	2.4	3.53

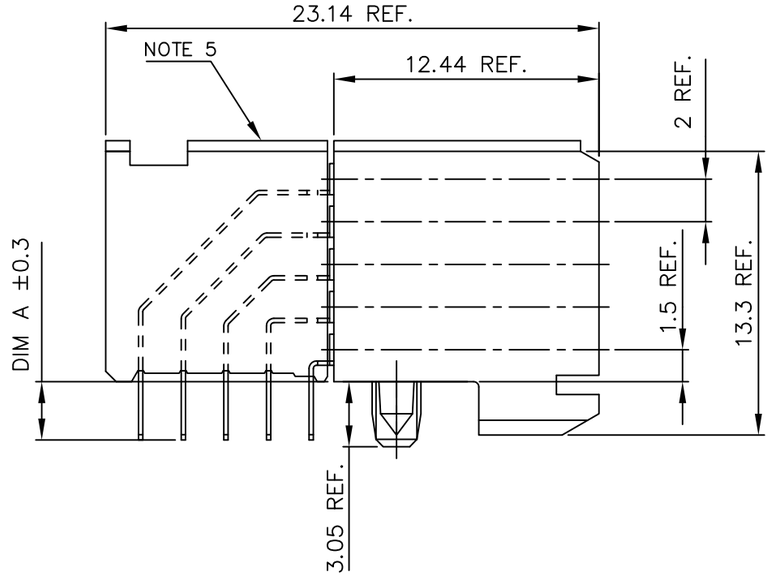

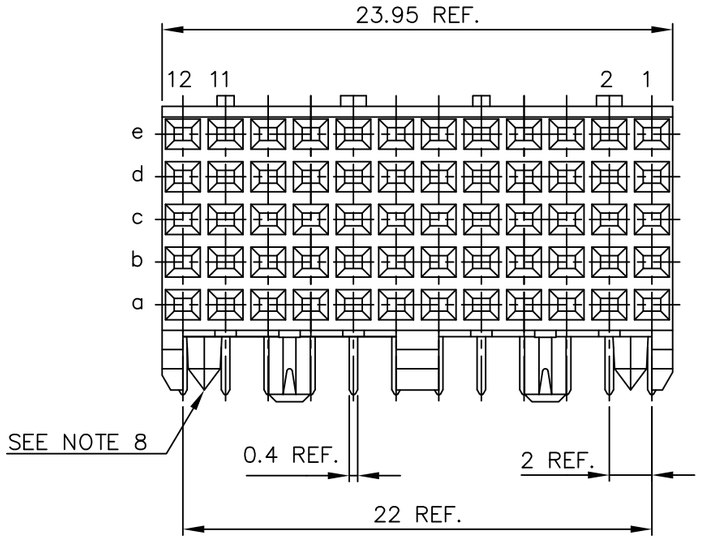

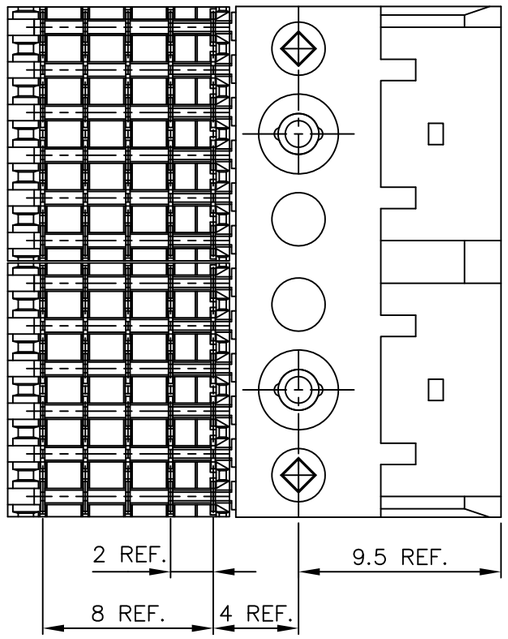

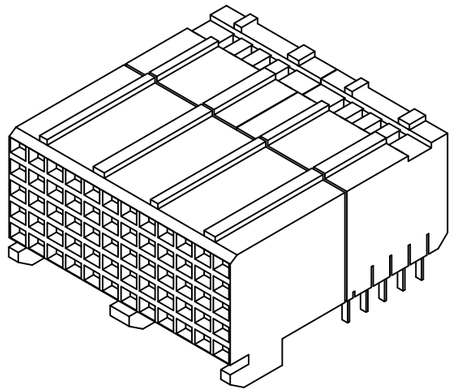

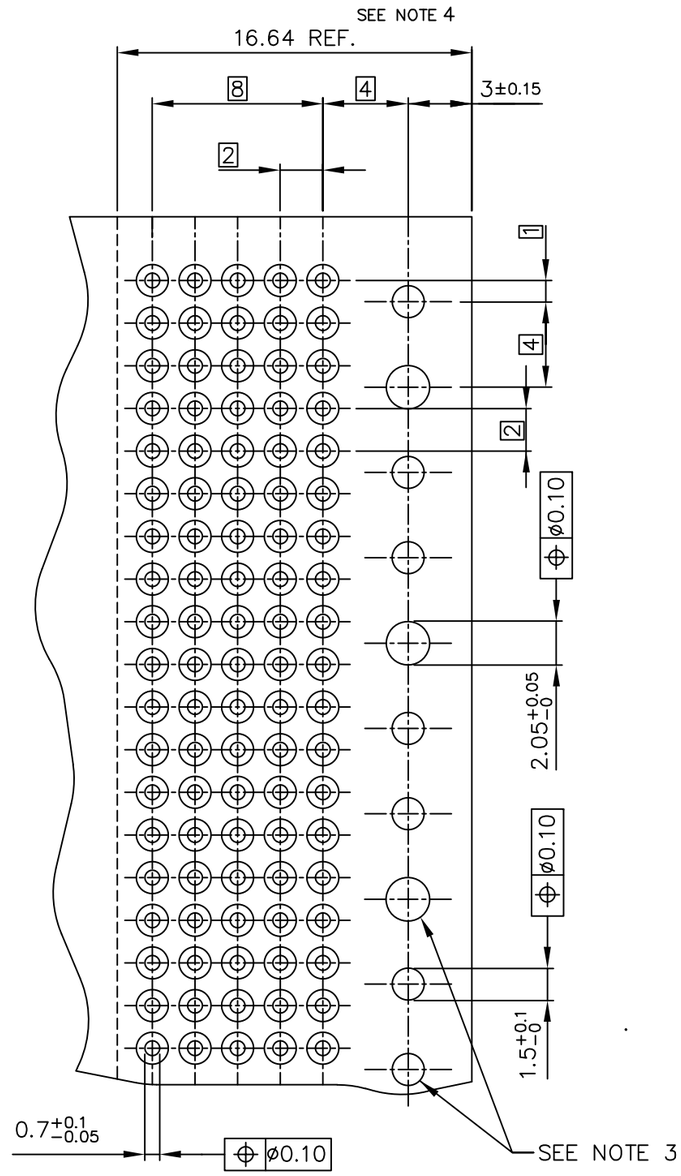

RECOMMENDED HOLE PATTERN,
COMPONENT SIDE.

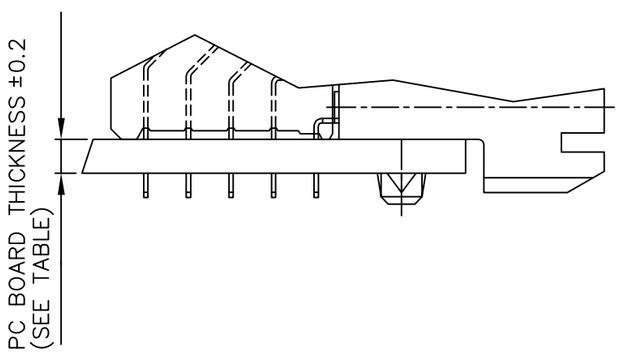

NOTES:

1. MATERIAL : BODY : THERMOPLASTIC UL94-V0
   : CONTACT : COPPER ALLOY.
2. FOR PLATING PERFORMANCE REFER DRAWING # 10159408 △
3. INDICATED HOLES ARE UNPLATED
4. SET BACK FOR TAIL BLOCK
5. TOP SURFACE OF PRESS BLOCK MAY EXTEND UP TO 0.4MM HIGHER THAN HOUSING. THIS MAY AFFECT THE TAIL LENGTH BEFORE APPLICATION TO A BOARD.
6. THIS PRODUCT MEETS EUROPEAN UNION DIRECTIVES AND OTHER COUNTRY REGULATIONS AS DESCRIBED IN GS-47- 0004
7. A △ SYMBOL WILL BE NEXT TO ANY DIMENSION, VIEW, OR NOTE WHICH HAS BEEN MODIFIED WITH THE CURRENT DRAWING REVISION.
8. DIAMOND LOCATION PEG ARE ONLY EXISTED ON THE BOTH SIDES OF PRODUCT.

ltr	ecn no	dr	date
F	DG07-0169	CENH	2005-07-15
G	DG08-0171	TER	2008-08-15
H	DF09-0068	CENH	2009-03-03
J	ELX-I-39007	MINI	2020-11-18

dr	R.VISSCHERS	1994-05-10
engr	ARUN	2020-11-18
chr	ALEX BABU	2020-11-18
appd	SANOJ	2020-11-18

mat'l. code

surface ISO 1302

tolerance ISO 406 ISO 1101

projection

tolerances unless otherwise specified

angles 0°±2°

linear .0±0.3 / .00±0.13 / .000±0.050

mm

scale —

product family: METRAL (tm)

title: 5 ROW RA STB SIGNAL
RECEPTACLE 24mm MOD PP

dwg no 85864 — sheet 1 of 1 — size A2

type Product Customer Drawing

sheet index — revision J — sheet 1

Amphenol FCi

© 2016 AFCI

form: A2-2016-02-24