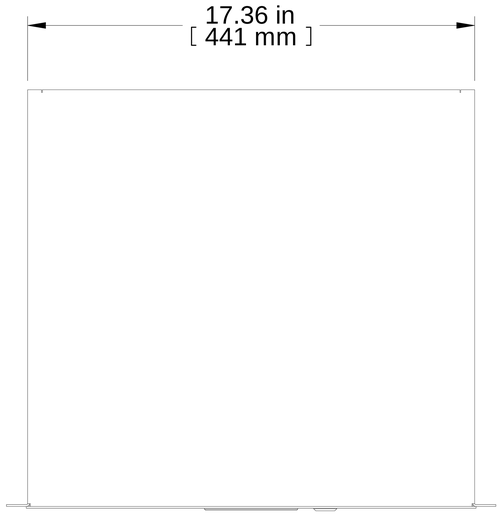

TOP VIEW

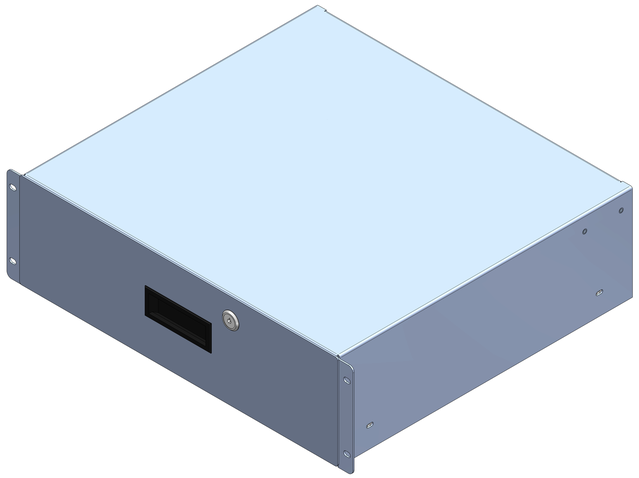

ISOMETRIC

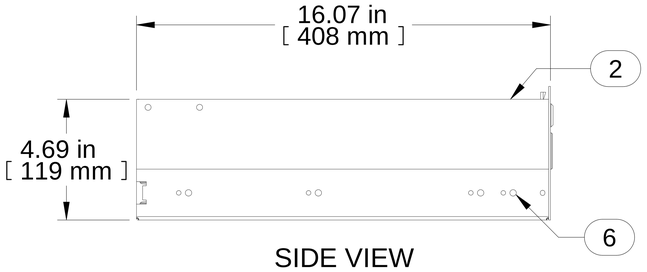

SIDE VIEW
WITHOUT SHROUD

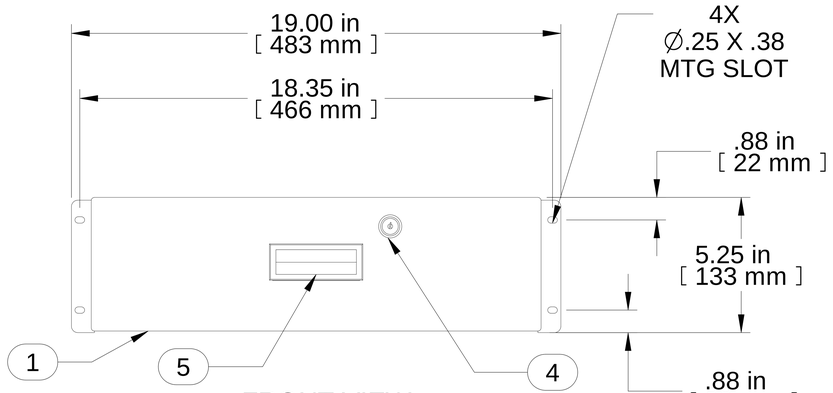

FRONT VIEW

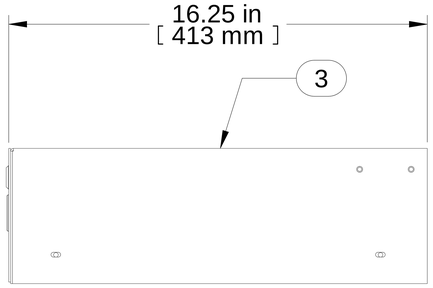

R.S. VIEW

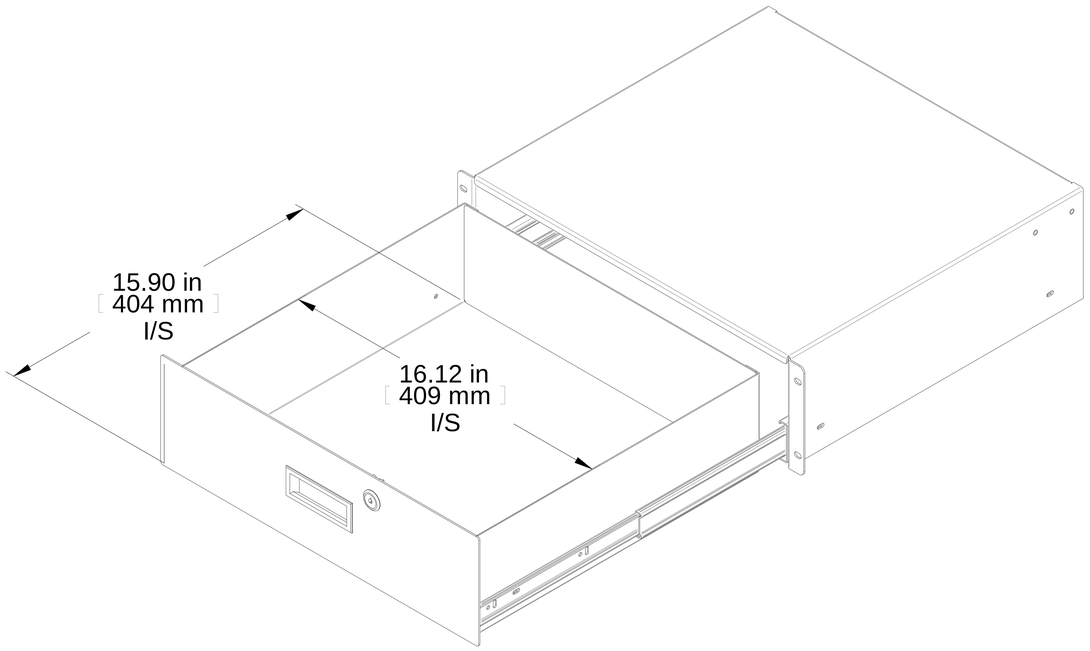

Item Number	Title	Quantity
1	RDRW - DRAWER PLATE	1
2	RDRW - DRAWER BODY	1
3	RDRW - DRAWER SHROUD	1
4	LOC KEY-LOCK WITH NUT H-7.5 MM	1
5	PLASTIC HANDLE	1
6	SLIDE 16" FULL TRAVEL	2

PART NUMBERS

RDRW1900516BK1	PAINTED BLACK TEXTURED
RDRW1900516LG1	PAINTED RAL7035 TEXTURED

NOTES

Maximum Weight 60lb No Rear Support
Maximum Weight 120lb Rear Supported
Mounting Hardware Included

Français

Pour tous les détails sur nos produits,
svp veuillez consulter notre site www.hammondmfg.com

Data subject to change without notice. Isometric drawing not to scale.
Les données sont sujettes à changement sans préavis.

HAMMOND MANUFACTURING®

www.hammondmfg.com

PART NO. **RDRW1900516**