Apr.1.2024 Copyright 2024 HIROSE ELECTRIC CO., LTD. All Rights Reserved.
In case of consideration for using Automotive equipment / device which demand high reliability, kindly contact our sales window correspondents.

	COUNT	DESCRIPTION OF REVISIONS	BY	CHKD	DATE		COUNT	DESCRIPTION OF REVISIONS	BY	CHKD	DATE
1	2	RE-F-10586	K.S.	H.O	05.02.13						. .
					. .						. .
					. .						. .

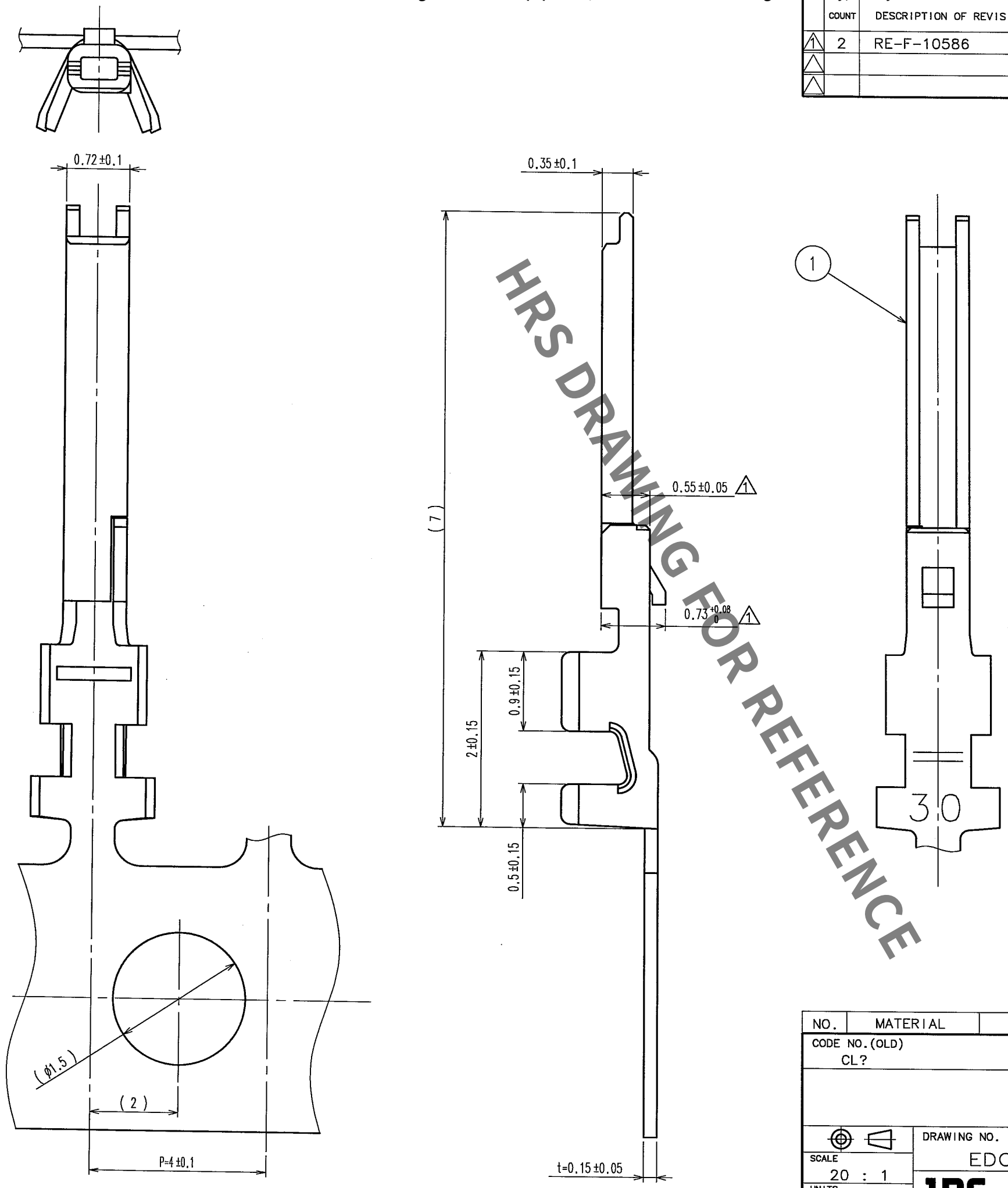

HRS DRAWING FOR REFERENCE

NOTE 1 1REEL:20000 TERMINAL
2 THE DIMENSIONS IN PARENTHESES ARE FOR REFERENCE.

NO.	MATERIAL	FINISH, REMARKS	NO.	MATERIAL	FINISH, REMARKS
			1	PHOSPHOR BRONZE	CONTACT AREA:GOLD 0.1μm min BARREL AREA:TIN-PLATING 1μm min UNDER PLATING:NICKEL 0.5μm min

CODE NO.(OLD) CL?	DRAWN	DESIGNED	CHECKED	APPROVED	RELEASED
	K.SHIBUYA 04.12.27	K.SHIBUYA 04.12.28	H.YAMAGUCHI 04.12.28	H.OKAWA 04.12.28	. .

SCALE 20 : 1
UNITS mm

DRAWING NO. EDC3-155324

HRS HIROSE ELECTRIC CO., LTD

PART NO. FX15-3032PCFA

CODE NO. CL575-2001-8

1/1

FORM NO.229

TO