CLIFF

CAT6 IDC FEEDTHROUGH CONNECTOR

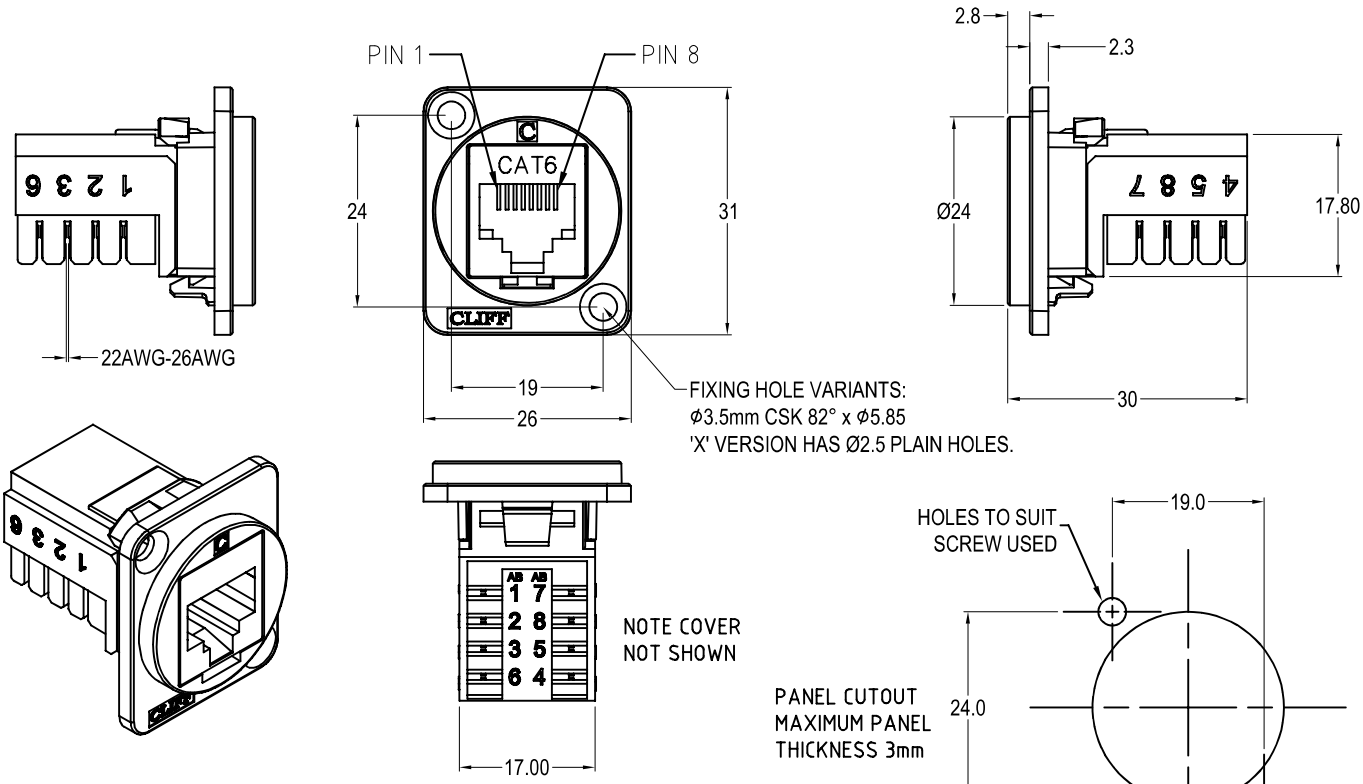

Feedthrough Features

- Fits standard XLR Ø24mm cutout.
- No soldering or punch termination. Use standard cable for each connector style.
- Front or rear mounted.
- Low rear profile

General:

Please note: Functionality is affected by cable quality, length and cable wiring configuration.

Other models available:

Part No.	
CP30227	Cat6 IDC Black plastic frame, CSK holes
CP30227X	Cat6 IDC Black plastic frame, PLAIN holes

Material:

1. RJ45 / IDC / Cover : PC
2. RJ45: Phosphor Bronze, gold plated
3. IDC: Phosphor Bronze, nickel plated
4. PCB: FR4
5. Plastic Frame: Polyamide UL94 V-2

Performance:

1. T568A + T568B wiring.

© CLIFF 10/2021 ISS.3

For further information, contact sales@cliffuk.co.uk

Cliff Electronic Components Limited,
76 Holmethorpe Avenue, Holmethorpe Ind. Estate,
Redhill, Surrey RH1 2PF U.K.
Tel: +44 (0)1737 771375 Fax: +44 (0)1737 766012

www.cliffuk.co.uk

✓RoHS