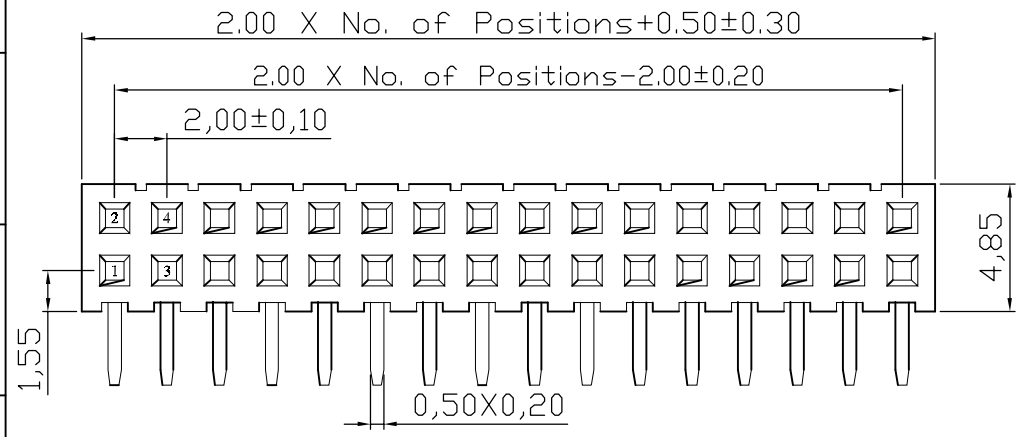

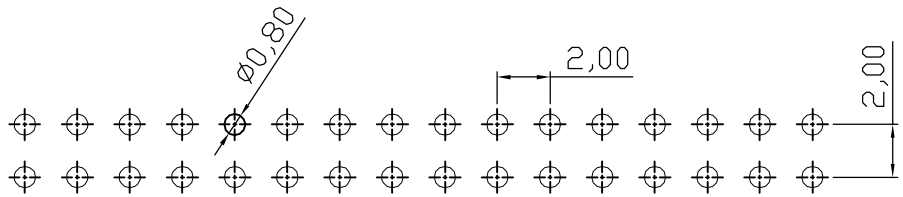

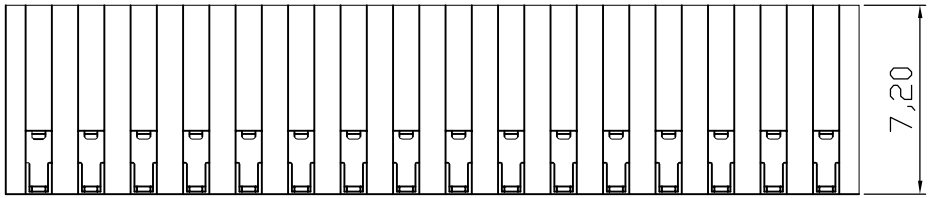

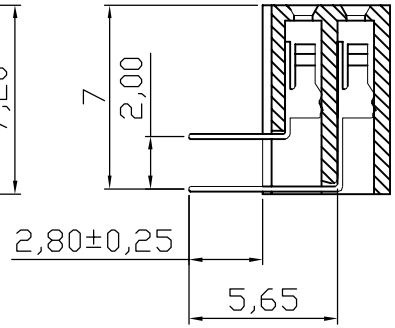

NOTES:

MATERIAL
1. Insulator Material:PA6T+30%GF(UL94V-0)
2. Contact Material : Brass
3. Plating: Tin plated

ELECTRICAL
1. Current Rating : 1.5AMP
2. Withstand Voltage : 450V AC/DC
3. Contact Resistance : 20mΩ max
4. Insulation Resistance: 1000MΩ min

ENVIRONMENTAL
1. Operation Temperature: -40°C to +105°C
2. Soldering temperature: +260°C,10s max
3. Packing: Tube

RoHS compliant

Unit: mm

Scale	Free
TOLERANCE	
X.X	±0.30
X.XX	±0.20
X.XXX	±0.10
DIM	TOL
Angle	±3°

Id.	Modification	Date	Name
2	Update	16.12.2011	Lucas
1	Drawn	18.12.2009	Dean

	Date	Name
Drawn	18.12.2009	Dean
Approved	16.12.2011	Hellwig

ASSMANN WSW components

Customer-No.

ASSMANN WSW-No.
A-BL200-DA-ZxxD

Drawing-No.
ASS 1399B CO

rev02

Replace

SHEET

SV000