CIRCUITS	P/N	COLOR	IMPRINTING
2	395239000	GREEN	SEE SHEET 2
2	395239001	GREEN	SEE SHEET 2
4	395239002	GREEN	SEE SHEET 2
5	395239003	GREEN	SEE SHEET 2
6	395239004	GREEN	SEE SHEET 2
7	395239005	GREEN	SEE SHEET 2

CUSTOMER PRODUCTION APPROVAL
APPROVED BY:_____
DATE:_____
MUST BE SIGNED AND RETURNED BEFORE PRODUCTION WILL BEGIN.

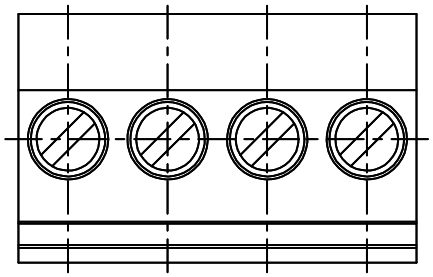

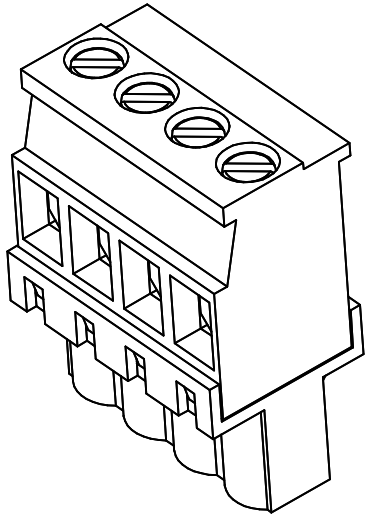

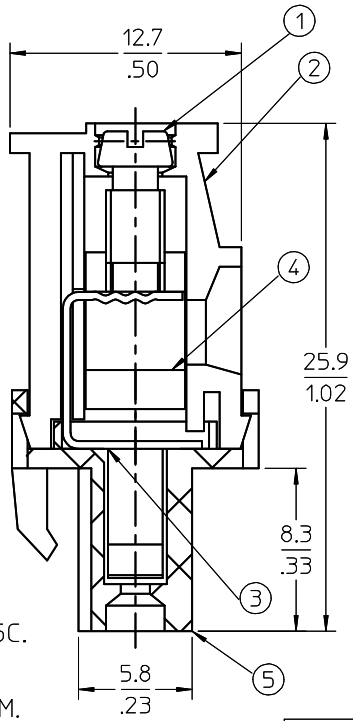

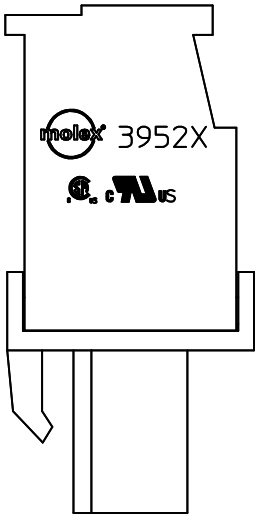

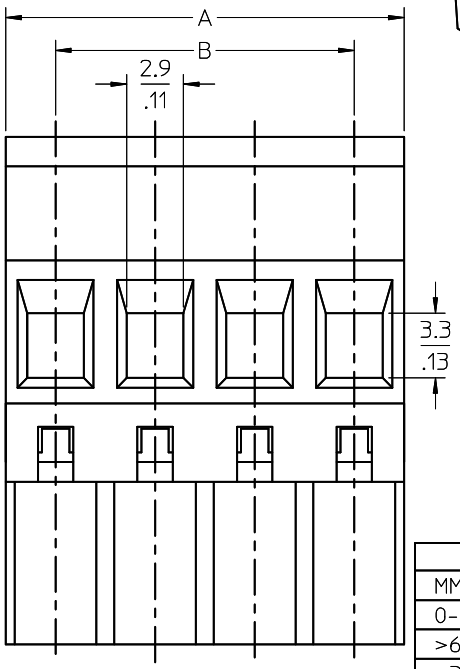

SPECIFICATIONS:

1. Material:
   (1). Screw: Steel
   (2). Cover: PA66
   (3). Terminal: Phosphor Bronze
   (4). Cage: Brass
   (5). Body: PA66
2. Wire range: 12 - 26 AWG
3. Electrical rating: 300V, 15A.
4. Wire strip length: 5.0mm.
5. Operating temperature: -40C to +105C.
6. Max torque: 5 In Lbs.
7. Insulation resistance: DC 500V, 500M.
8. Dielectric withstand: AC 2500V for 1 minute.
9. Breakdown voltage: 4000V.
10. Contact resistance: <10 mW.
11. A = (N x P)
12. B = (N - 1) x P
13. P (PITCH) = 5.0mm (.197").
14. N = Number of positions available 2 through 24.

TOLERANCES			
MM	TOL	INCH	TOL
0-6	±0.25	0-.24	±.010
>6-30	±0.40	.24-1.18	±.016
>30-120	±0.50	1.18-4.76	±.020
>120	±0.80	>4.76	±.031

RPM-T201741599
EC NO: IPG2018-0096
DRWN:ABENJAMINLW 2017/08/23
CH'KD:
APPR:BRUPERT 2017/08/30
DESCRIPTION
REV A

QUALITY SYMBOLS
▼=0
▽=0

GENERAL TOLERANCES (UNLESS SPECIFIED)	mm	INCH
4 PLACES	± ---	± ---
3 PLACES	± ---	± ---
2 PLACES	± ---	± ---
1 PLACE	± ---	± ---
ANGULAR ±---°		

DRAFT WHERE APPLICABLE MUST REMAIN WITHIN DIMENSIONS

DIMENSION STYLE: MM/IN
SCALE: 4:1
DESIGN UNITS: INCH
THIRD ANGLE PROJECTION

DRAWN BY: ABENJAMINLW DATE: 2017/08/23
CHECKED BY: DATE:
APPROVED BY: BRUPERT DATE: 2017/08/30

TITLE: 5.0MM, EURO PLUG,VERT, REAR WIRE ENTRY W/ SPCL IMPRINTING

MOLEX INCORPORATED

MATERIAL NO.: SEE CHART
DOCUMENT NO.: RSD-39523-001
SHEET NO.: 1 OF 2
SIZE: B

THIS DRAWING CONTAINS INFORMATION THAT IS PROPRIETARY TO MOLEX INCORPORATED AND SHOULD NOT BE USED WITHOUT WRITTEN PERMISSION

IMPRINTING CHART

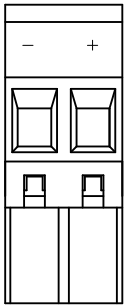

395239000

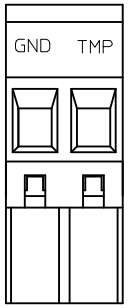

395239001

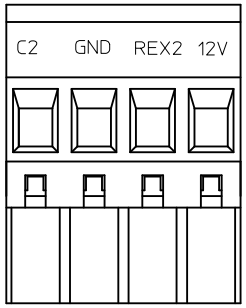

395239002

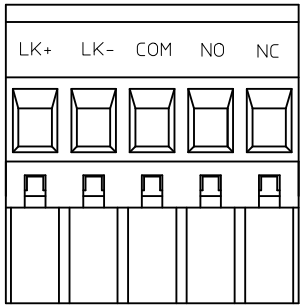

395239003

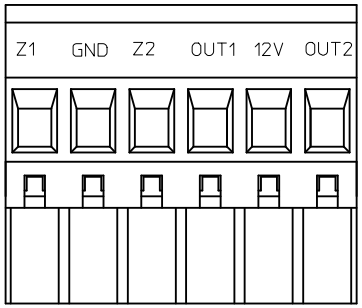

395239004

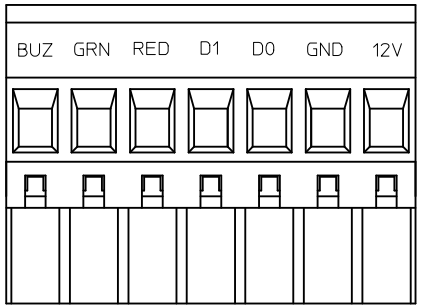

395239005

RPM-T201741599 EC NO: IPG2018-0096 DRWN:ABENJAMINLW 2017/08/23 CH'KD: APPR:BRUPERT 2017/08/30 A	DESCRIPTION REV	QUALITY SYMBOLS F_A=0 F_C=0 F_P=0	GENERAL TOLERANCES (UNLESS SPECIFIED) mm / INCH 4 PLACES ± --- / ± --- 3 PLACES ± --- / ± --- 2 PLACES ± --- / ± --- 1 PLACE ± --- / ± --- 0 PLACE ± / ± ANGULAR ±---° DRAFT WHERE APPLICABLE MUST REMAIN WITHIN DIMENSIONS	DIMENSION STYLE MM/IN DRAWN BY ABENJAMINLW DATE 2017/08/23 CHECKED BY DATE APPROVED BY BRUPERT DATE 2017/08/30 MATERIAL NO. SEE CHART	SCALE 2:1 DESIGN UNITS INCH THIRD ANGLE PROJECTION TITLE 5.0MM, EURO PLUG,VERT, REAR WIRE ENTRY W/ SPCL IMPRINTING molex DOCUMENT NO. RSD-39523-001 SHEET NO. 2 OF 2	SIZE A3	THIS DRAWING CONTAINS INFORMATION THAT IS PROPRIETARY TO MOLEX INCORPORATED AND SHOULD NOT BE USED WITHOUT WRITTEN PERMISSION

tb_frame_A3_P_AM_T
Rev. G 2012/01/11

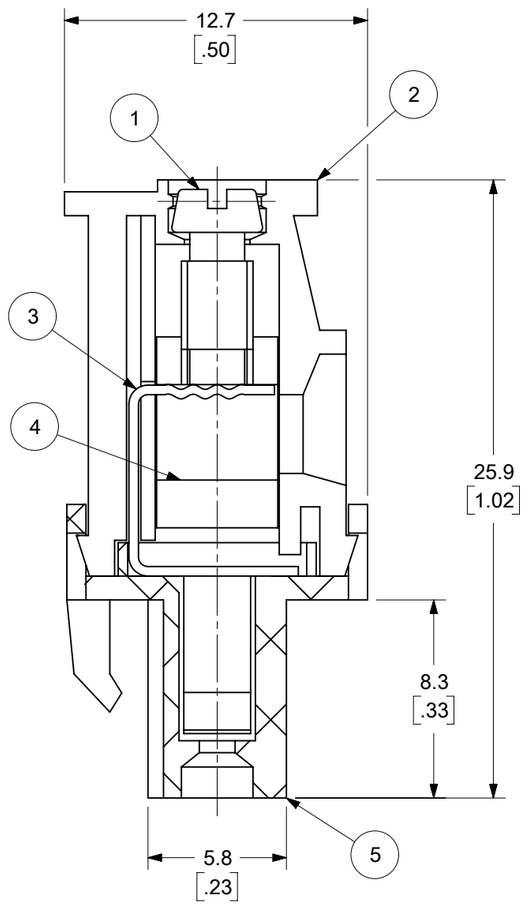

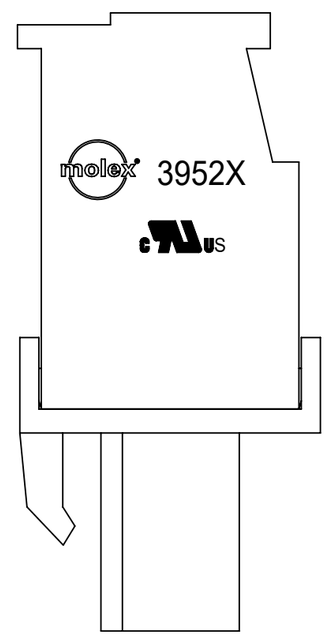

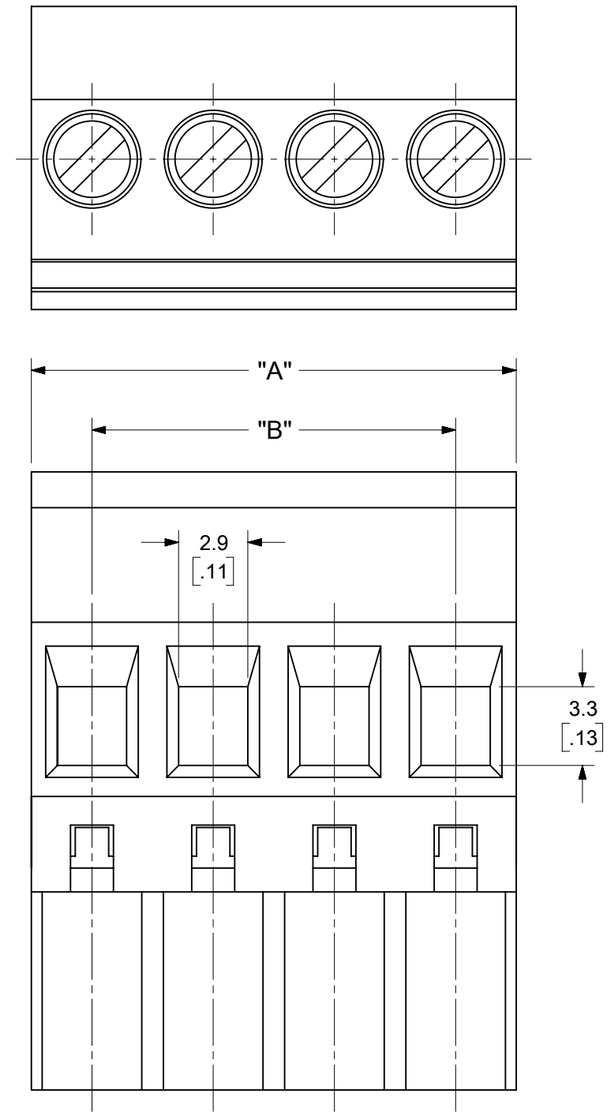

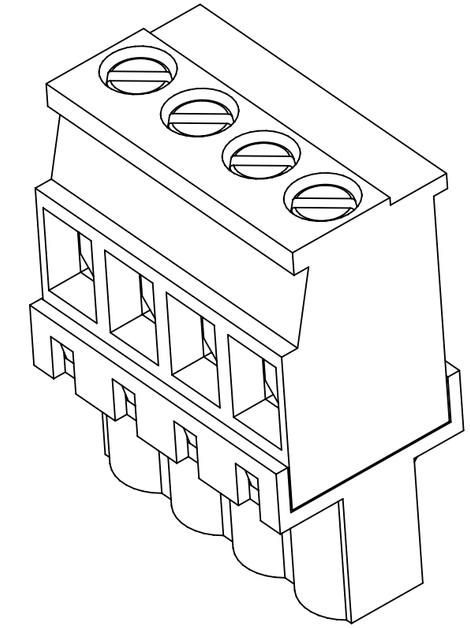

SPECIFICATIONS:

1. MATERIAL:
   (1). M3 CLAMP SCREW: ZINC PLATED STEEL
   (2). COVER: PA66, UL94-V0
   (3). TERMINAL: TIN PLATED COPPER ALLOY
   (4). CAGE: NICKEL PLATED BRASS
   (5). BODY: PA66, UL94-V0
2. WIRE RANGE: 12 - 30 AWG
3. ELETRICAL RATING: 300V, 18A PER UL
4. WIRE STRIP LENGTH: 5.0mm.
5. OPERATING TEMPERATURE: -40°C to +105°C.
6. MAX TORQUE: 5 IN LBS.
7. INSULATION RESISTANCE: DC 500V, 500MΩ.
8. DIELECTRIC WITHSTAND: AC 2500V FOR 1 MINUTE.
9. BREAKDOWN VOLTAGE: 4000V.
10. CONTACT RESISTANCE: <10 mΩ.

TOLERANCES			
MM	TOL	INCH	TOL
0-6	±0.25	0-.24	±.010
>6-30	±0.40	>.24-1.18	±.016
>30-120	±0.50	>1.18-4.76	±.020
>120	±0.80	>4.76	±.031

THIS DRAWING CONTAINS INFORMATION THAT IS PROPRIETARY TO MOLEX ELECTRONIC TECHNOLOGIES, LLC AND SHOULD NOT BE USED WITHOUT WRITTEN PERMISSION

FUNCTIONAL SYMBOLS: FA = 0, FC = 0, FP = 0

DIVISIONAL SYMBOLS

DIMENSION UNITS: MM/INCH
SCALE: 4:1

GENERAL TOLERANCES (UNLESS SPECIFIED)

	MM	INCH
4 PLACES	± ---	± ---
3 PLACES	± ---	± SEE CHART
2 PLACES	± SEE CHART	± SEE CHART
1 PLACE	± SEE CHART	± ---
0 PLACES	± ---	± ---
ANGULAR TOL	± ---	

DRAFT WHERE APPLICABLE MUST REMAIN WITHIN DIMENSIONS

CURRENT REV DESC: REMOVED PCB LAYOUT

EC NO: 750901
DRWN: ABENJAMINLW 2023/05/24
CHK'D: DACHAMMER 2023/05/24
APPR: JFMURPHY 2023/05/25

INITIAL REVISION:
DRWN: LROTHAUS 2006/01/09
APPR: JPAWLICK 2006/01/10

THIRD ANGLE PROJECTION | DRAWING: B-SIZE | SERIES: 39523

molex

5.0MM, EURO PLUG,
VERTICAL, REAR WIRE ENTRY

PRODUCT CUSTOMER DRAWING

DOCUMENT NUMBER	DOC TYPE	DOC PART	REVISION
SD-39523-002	PSD	001	A5

MATERIAL NUMBER	CUSTOMER	SHEET NUMBER
SEE SHEET-2	GENERAL MARKET	1 OF 2

DOCUMENT STATUS	P1	RELEASE DATE	2023/05/25 16:08:30

FORMAT: Eng-lega-master-lb-prod-B
REVISION: E1
DATE: 2021/05/01

DESCRIPTION	CIRCUIT SIZE	MATERIAL NUMBERS												DIMENSIONAL INFORMATION			
		BLACK						GREEN									
		100% TIN			30 u" GOLD			100% TIN			30 u" GOLD						
		PRINTING OPTIONS			PRINTING OPTIONS			PRINTING OPTIONS			PRINTING OPTIONS			DIM. "A"		DIM. "B"	
		None	10AV	11AV	None	10AV	11AV	None	10AV	11AV	None	10AV	11AV	mm	inch	mm	inch
5.0MM, EURO PLUG, VERTICAL, REAR WIRE ENTRY	2	395232002	395232302	395232402	395232502	395232802	395232902	395237002	395237302	395237402	395237502	395237802	395237902	10.00	.394	5.00	.197
5.0MM, EURO PLUG, VERTICAL, REAR WIRE ENTRY	3	395232003	395232303	395232403	395232503	395232803	395232903	395237003	395237303	395237403	395237503	395237803	395237903	15.00	.591	10.00	.394
5.0MM, EURO PLUG, VERTICAL, REAR WIRE ENTRY	4	395232004	395232304	395232404	395232504	395232804	395232904	395237004	395237304	395237404	395237504	395237804	395237904	20.00	.787	15.00	.591
5.0MM, EURO PLUG, VERTICAL, REAR WIRE ENTRY	5	395232005	395232305	395232405	395232505	395232805	395232905	395237005	395237305	395237405	395237505	395237805	395237905	25.00	.984	20.00	.787
5.0MM, EURO PLUG, VERTICAL, REAR WIRE ENTRY	6	395232006	395232306	395232406	395232506	395232806	395232906	395237006	395237306	395237406	395237506	395237806	395237906	30.00	1.181	25.00	.984
5.0MM, EURO PLUG, VERTICAL, REAR WIRE ENTRY	7	395232007	395232307	395232407	395232507	395232807	395232907	395237007	395237307	395237407	395237507	395237807	395237907	35.00	1.378	30.00	1.181
5.0MM, EURO PLUG, VERTICAL, REAR WIRE ENTRY	8	395232008	395232308	395232408	395232508	395232808	395232908	395237008	395237308	395237408	395237508	395237808	395237908	40.00	1.575	35.00	1.378
5.0MM, EURO PLUG, VERTICAL, REAR WIRE ENTRY	9	395232009	395232309	395232409	395232509	395232809	395232909	395237009	395237309	395237409	395237509	395237809	395237909	45.00	1.772	40.00	1.575
5.0MM, EURO PLUG, VERTICAL, REAR WIRE ENTRY	10	395232010	395232310	395232410	395232510	395232810	395232910	395237010	395237310	395237410	395237510	395237810	395237910	50.00	1.969	45.00	1.772
5.0MM, EURO PLUG, VERTICAL, REAR WIRE ENTRY	11	395232011	395232311	395232411	395232511	395232811	395232911	395237011	395237311	395237411	395237511	395237811	395237911	55.00	2.165	50.00	1.969
5.0MM, EURO PLUG, VERTICAL, REAR WIRE ENTRY	12	395232012	395232312	395232412	395232512	395232812	395232912	395237012	395237312	395237412	395237512	395237812	395237912	60.00	2.362	55.00	2.165
5.0MM, EURO PLUG, VERTICAL, REAR WIRE ENTRY	13	395232013	395232313	395232413	395232513	395232813	395232913	395237013	395237313	395237413	395237513	395237813	395237913	65.00	2.559	60.00	2.362
5.0MM, EURO PLUG, VERTICAL, REAR WIRE ENTRY	14	395232014	395232314	395232414	395232514	395232814	395232914	395237014	395237314	395237414	395237514	395237814	395237914	70.00	2.756	65.00	2.559
5.0MM, EURO PLUG, VERTICAL, REAR WIRE ENTRY	15	395232015	395232315	395232415	395232515	395232815	395232915	395237015	395237315	395237415	395237515	395237815	395237915	75.00	2.953	70.00	2.756
5.0MM, EURO PLUG, VERTICAL, REAR WIRE ENTRY	16	395232016	395232316	395232416	395232516	395232816	395232916	395237016	395237316	395237416	395237516	395237816	395237916	80.00	3.150	75.00	2.953
5.0MM, EURO PLUG, VERTICAL, REAR WIRE ENTRY	17	395232017	395232317	395232417	395232517	395232817	395232917	395237017	395237317	395237417	395237517	395237817	395237917	85.00	3.346	80.00	3.150
5.0MM, EURO PLUG, VERTICAL, REAR WIRE ENTRY	18	395232018	395232318	395232418	395232518	395232818	395232918	395237018	395237318	395237418	395237518	395237818	395237918	90.00	3.543	85.00	3.346
5.0MM, EURO PLUG, VERTICAL, REAR WIRE ENTRY	19	395232019	395232319	395232419	395232519	395232819	395232919	395237019	395237319	395237419	395237519	395237819	395237919	95.00	3.740	90.00	3.543
5.0MM, EURO PLUG, VERTICAL, REAR WIRE ENTRY	20	395232020	395232320	395232420	395232520	395232820	395232920	395237020	395237320	395237420	395237520	395237820	395237920	100.00	3.937	95.00	3.740
5.0MM, EURO PLUG, VERTICAL, REAR WIRE ENTRY	21	395232021	395232321	395232421	395232521	395232821	395232921	395237021	395237321	395237421	395237521	395237821	395237921	105.00	4.134	100.00	3.937
5.0MM, EURO PLUG, VERTICAL, REAR WIRE ENTRY	22	395232022	395232322	395232422	395232522	395232822	395232922	395237022	395237322	395237422	395237522	395237822	395237922	110.00	4.331	105.00	4.134
5.0MM, EURO PLUG, VERTICAL, REAR WIRE ENTRY	23	395232023	395232323	395232423	395232523	395232823	395232923	395237023	395237323	395237423	395237523	395237823	395237923	115.00	4.528	110.00	4.331
5.0MM, EURO PLUG, VERTICAL, REAR WIRE ENTRY	24	395232024	395232324	395232424	395232524	395232824	395232924	395237024	395237324	395237424	395237524	395237824	395237924	120.00	4.724	115.00	4.528

TOLERANCES			
MM	TOL	INCH	TOL
0-6	±0.25	0-.24	±.010
>6-30	±0.40	.24-1.18	±.016
>30-120	±0.50	1.18-4.76	±.020
>120	±0.80	>4.76	±.031

FUNCTIONAL SYMBOLS: FA = 0; FC = 0; FP = 0

DIVISIONAL SYMBOLS

THIS DRAWING CONTAINS INFORMATION THAT IS PROPRIETARY TO MOLEX ELECTRONIC TECHNOLOGIES, LLC AND SHOULD NOT BE USED WITHOUT WRITTEN PERMISSION

DIMENSION UNITS: MM/INCH
SCALE: 1:1

GENERAL TOLERANCES (UNLESS SPECIFIED)

	MM	INCH
4 PLACES	± ---	± ---
3 PLACES	± ---	± SEE CHART
2 PLACES	± SEE CHART	± SEE CHART
1 PLACE	± SEE CHART	± ---
0 PLACES	± ---	± ---
ANGULAR TOL	± ---	

DRAFT WHERE APPLICABLE MUST REMAIN WITHIN DIMENSIONS

CURRENT REV DESC: REMOVED PCB LAYOUT

EC NO: 750901
DRWN: ABENJAMINLW 2023/05/24
CHK'D: DACHAMMER 2023/05/24
APPR: JFMURPHY 2023/05/25

INITIAL REVISION:
DRWN: LROTHAUS 2006/01/09
APPR: JPAWLICK 2006/01/10

THIRD ANGLE PROJECTION

DRAWING: B-SIZE
SERIES: 39523

molex

5.0MM, EURO PLUG, VERTICAL, REAR WIRE ENTRY

PRODUCT CUSTOMER DRAWING

DOCUMENT NUMBER	DOC TYPE	DOC PART	REVISION
SD-39523-002	PSD	001	A5

MATERIAL NUMBER	CUSTOMER	SHEET NUMBER
SEE CHART	GENERAL MARKET	2 OF 2

DOCUMENT STATUS	P1	RELEASE DATE	2023/05/25 16:08:30

FORMAT: Eng-lega-master-tb-prod-B
REVISION: E1
DATE: 2021/05/01