Mechanical Dimensions: Inches [mm]

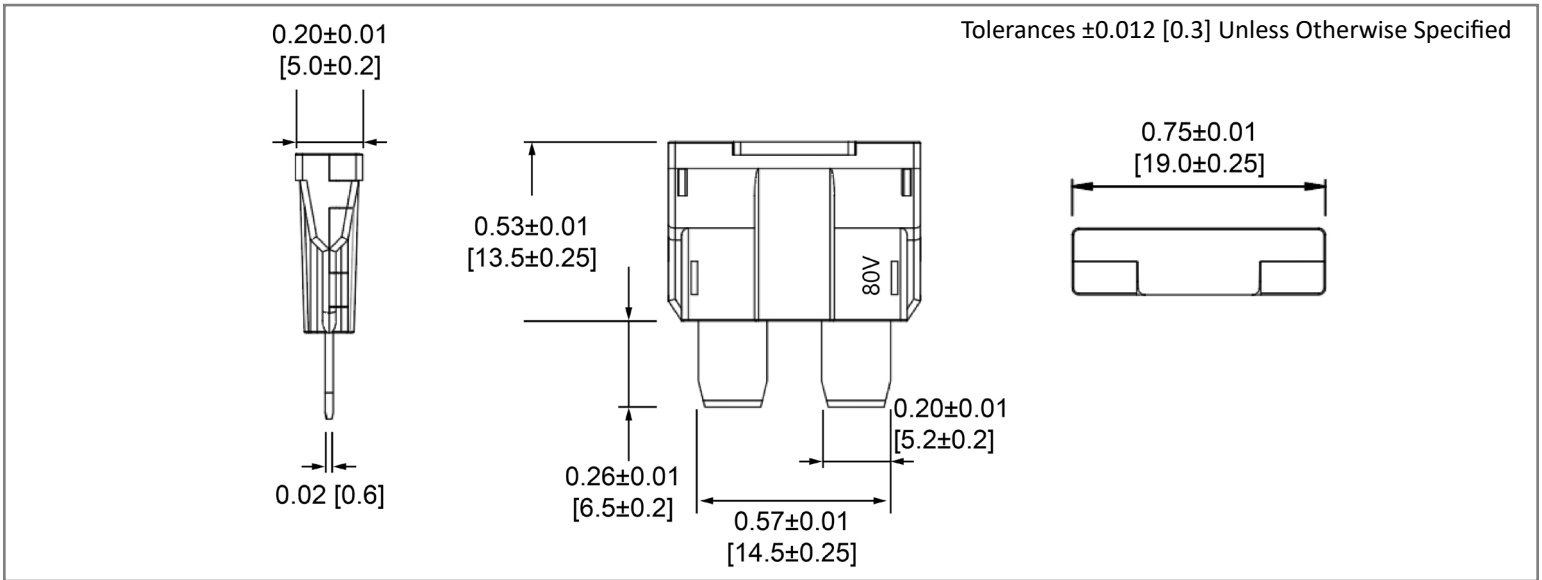

Part Numbers Information

Bulk Part #	Amperage	Body Color	Voltage Drop (mV)	Cold Resistance (mΩ)	I²T
ANR80-UL-500MA	500mA	Dark Blue	150	290 mΩ	0.3
ANR80-UL-1A	1A	Black	125	100 mΩ	2.3
ANR80-UL-2A	2A	Grey	120	43.0 mΩ	9.6
ANR80-UL-3A	3A	Violet	110	30.0 mΩ	16.2
ANR80-UL-4A	4A	Pink	110	22.0 mΩ	36.8
ANR80-UL-5A	5A	Tan	110	16.0 mΩ	62.5
ANR80-UL-6A	6A	Light Red	-	-	-
ANR80-UL-7A	7A	Light Orange	-	-	-
ANR80-UL-7.5A	7.5A	Brown	90	9.00 mΩ	73.1
ANR80-UL-8A	8A	Light Yellow	-	-	-
ANR80-UL-10A	10A	Red	90	6.50 mΩ	210
ANR80-UL-12A	12A	Light Pink	-	-	-
ANR80-UL-15A	15A	Blue	90	4.00 mΩ	270
ANR80-UL-16A	16A	Light Green	-	-	-
ANR80-UL-20A	20A	Yellow	90	3.00 mΩ	360
ANR80-UL-25A	25A	Clear	80	1.90 mΩ	813
ANR80-UL-30A	30A	Green	80	1.65 mΩ	1530
ANR80-UL-35A	35A	Blue Green	70	1.45 mΩ	1960
ANR80-UL-40A	40A	Orange	70	1.25 mΩ	3200

Electrical Specifications

Rated Voltage	80VDC
Interrupting Rating	1000A @ 58VDC; 1000A @ 80VDC
Testing	SAE J1284; SAE J2576; ISO 8820-3;

Material Specifications

Body Material	Nylon 66 with 30% Fiber Glass (UL94V-0)
Element Material	Tin Plated Alloy Wire
Terminal Materal	Copper Alloy, Tin Plated

Time vs. Percent of Rated Current

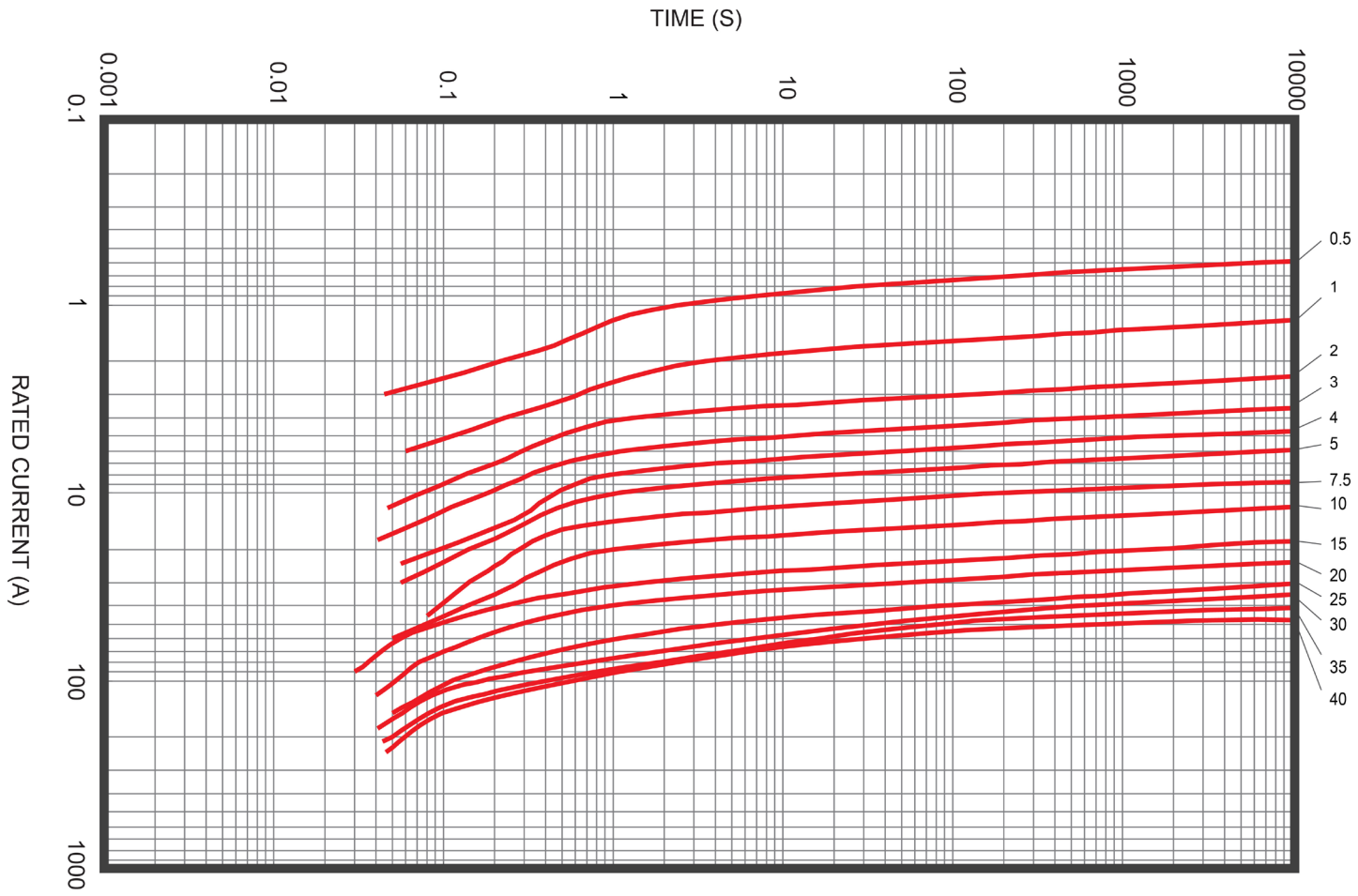

% of Rated Current	Min Hold Time	Max Hold Time
100%	Carry (35A~40A)	-
110%	Carry (500mA~30A)	-
135%	750ms	3600s
200%	150ms	60s
350%	40ms	1s
600%	10ms	100ms

Temperature De-Rating Curve

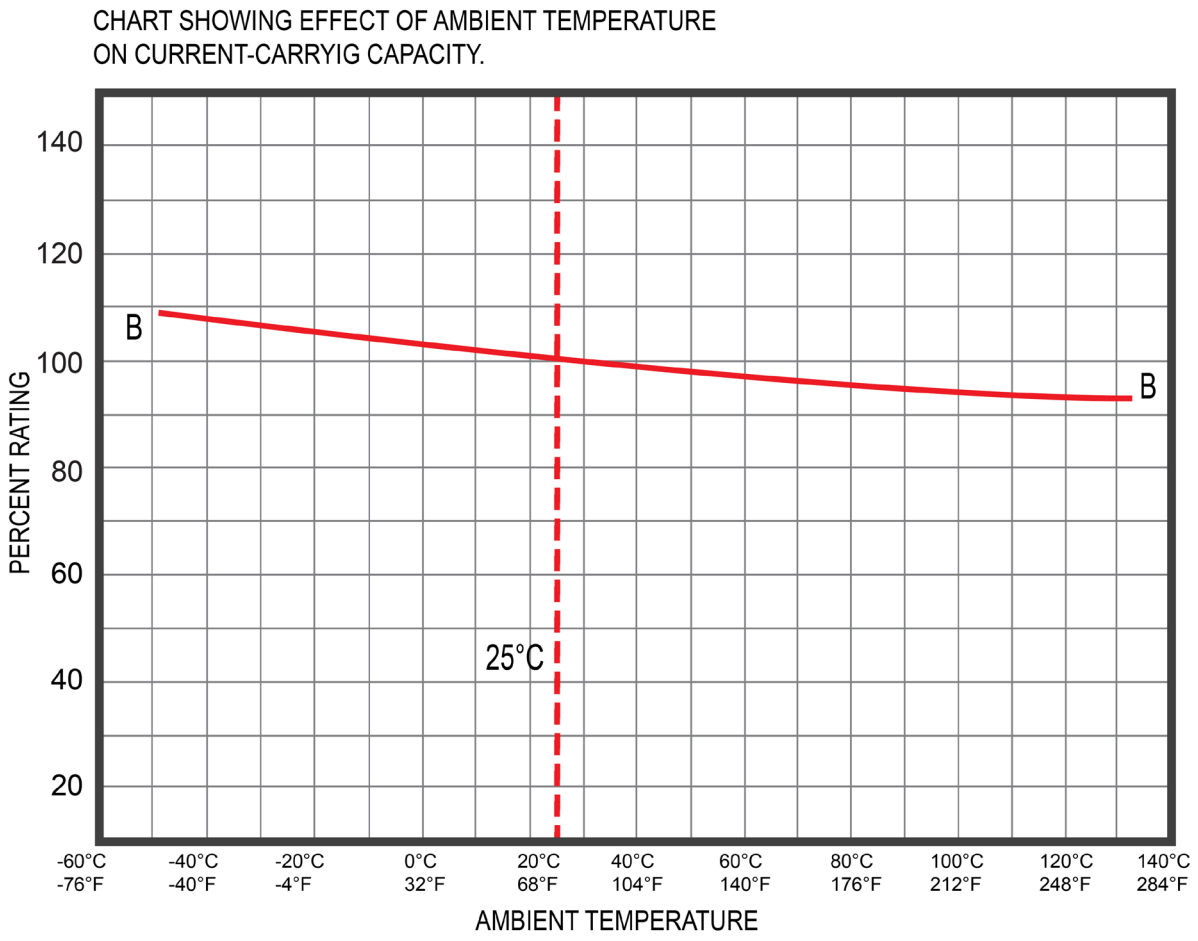

Rev	Date of issue	Revision Notes	Designed	Approved
C	06-11-2024	Updated Format; Added Temperature De-rating Curve	RC	OF