GardTec

Part Number:

SC1000-W1

Material: C1008 Steel
Finish: Bright Nickel Chrome Plating
Ring Diameter: 2.3mm
Rib Diameter: 2.3mm
General Tolerance Unless Noted: ±0.5mm
Unit: mm
RoHS/REACH Compliant

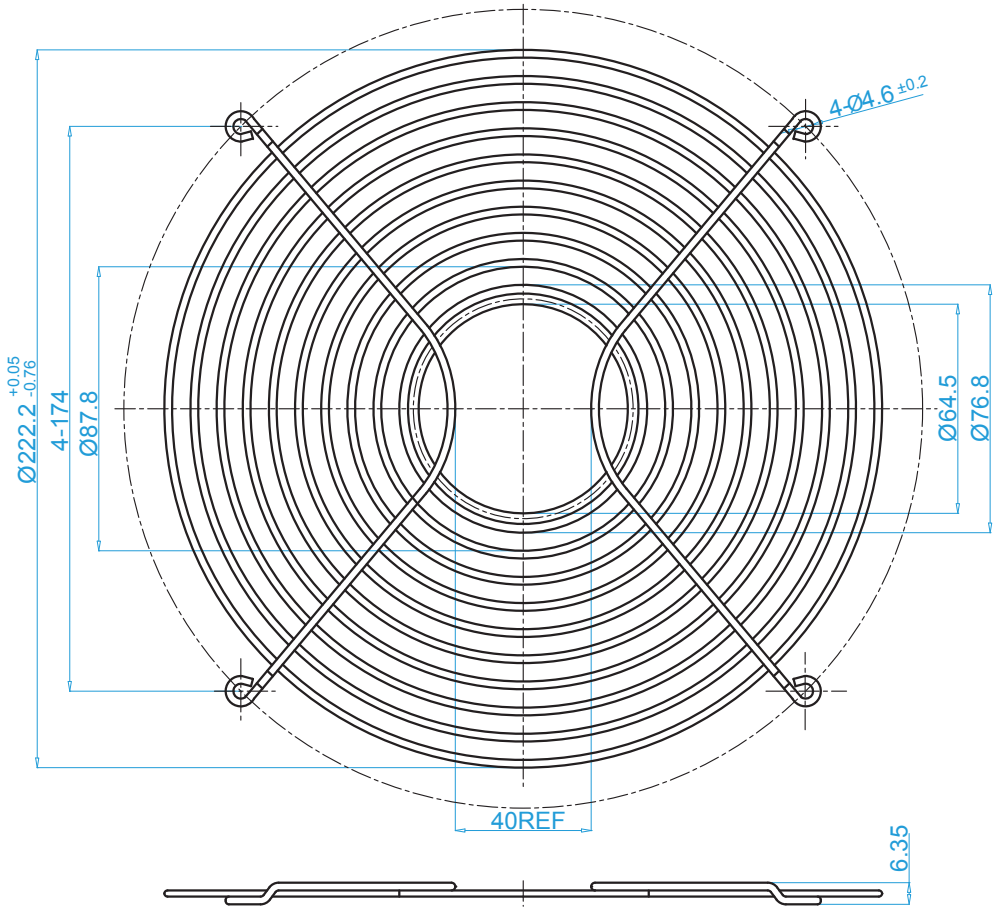

These drawings are the property of Gardtec,Inc and cannot be reproduced for or communicated to a third party without the express written permission of Gardtec,Inc.