VAC VACUUMSCHMELZE	Specification	Item no.: T60404-N4641-X920
K-No.: 26893	**Differential Current Sensor acc. to the standard IEC62752-1:2016** 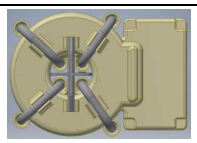	Date: 01.08.2022
Customer: Standard type		Page 1 of 7

Description
- Fluxgate current sensor with toroidal core
- PCB mounting

Characteristics
- Excellent accuracy
- AEC-Q qualified components
- Switching open-collector outputs
- Compact design

Applications
Mainly used for mobile applications:
- IC-CPD acc. to IEC62752

Patents: EP2571128 / US9397494 / CN103001175 // EP2813856

Electrical data – Ratings		min.	typ.	max.	Unit
I_P	Primary rated current (1phase / 3phase)		32	40	A
$I_{\Delta N1}$	Rated residual operating current 1		6		mA DC
$I_{\Delta N2}$	Rated residual operating current 2		30		mA rms
$I_{\Delta N1,\ tolerance}$	Trip tolerance 1	4	5	6	mA DC
$I_{\Delta N2,\ tolerance}$	Trip tolerance 2	20		30(1) / 60(2)	mA rms
$S_{PWM\text{-}OUT}$	Scaling factor of the DC component $I_{\Delta N1}$ **(for monitoring purpose only!)**		3.33		%/mA
$I_{\Delta RI,1/2}$ (Fig.1)	Recovery current level for $I_{\Delta N1}/I_{\Delta N2}$ (absolute value dc/rms)		2.5 / 10		mA

(1) f = DC to 1kHz (2) f = 1kHz to 2kHz

Accuracy – Dynamic performance data					
$I_{\Delta N,max}$	Measuring range (peak)	-300		+300	mA
X	Resolution (@ $I_{\Delta N}$, Θ_A = 25°C)		< 0.2		mA
t_r (Fig.3)	Response time		According to IEC62752:2016(3)		
f_{BW} (Fig.4)	Frequency range	DC		2	kHz

General data					
ϑ_A	Ambient operation temperature	-40		85	°C
$\vartheta_{Storage}$	Ambient storage temperature(4)	-40		85	°C
m	Mass		32		g
V_{CC}	Supply voltage	4.8	5	5.2	V
I_{CC}	Consumption current	38		45	mA rms
$S_{clear,\ pp}$	Clearance (primary to primary)(5)		4.22		mm
$S_{creep,\ pp}$	Creepage (primary to primary)(5)		5.65		mm
$S_{clear,\ ps}$	Clearance (primary to secondary)(6)		6.53		mm
$S_{creep,\ ps}$	Creepage (primary to secondary)(6)		7.75		mm
FIT	EN/IEC 61709 / SN 29500(7) (MIL-HDBK-217F)(7)		1529 (6349)		fit
SW	Firmware		D0462 V1.04		

(3) **Switching time of a standard relay (t = 20ms) is considered.**

(4) **see VAC M-sheet 3101; storage temperature inside cardboard packaging.**

(5) **Can only be achieved with the isolator; all values acc. to applied standards.**

(6) **Designed, manufactured and tested in accordance with IEC60664-1:2007. The isolation coordination is according to: Reinforced insulation, Insulation material group 1, Pollution degree 3 and overvoltage category III. Values refer to nominal real clearance and creepage.**

(7) **The results are valid under following conditions: 55°C mean component ambient temperature by continuous operation (8760h per year); Environment condition: ground mobile, no dust or harmful substances, according to IEC61709; Fit equals one failure per 10^9 component hours.**

General description of sensor function:
The Sensor is sensitive to AC and DC current and can be used for fault current detection in IC-CPD applications. The Sensor detects AC and DC fault currents according to IEC62752:2016. In the event of a DC fault current, PIN 3 will change its state from a low level (GND) to high impedance state. In the event of an AC fault current, PINs 3 and 4 will change state from a low level (GND) to a high impedance state.
Error conditions (e.g. an internal error) are signaled by PIN 1 (ERROR-OUT) which changes state to high impedance.

Datum	Name	Index	Änderung
01.08.2022	SF	83	Add marking trademark “benvac” (CN 22-009)
11.10.2021	ZB	82	Patents added on sheet 1. CN-21-290

Editor.: R&D-PD-NPI D	Designer: MB		MC-PM: BZ			Released by: SB

Mechanical outline (mm): General tolerances DIN ISO 2768-c

Connections:

PIN no. 1-8: 0.46mm x 0.46mm
PIN no. 9-16: Ø = 2.5mm

Marking:

benvac
4641-X920-83
F DC

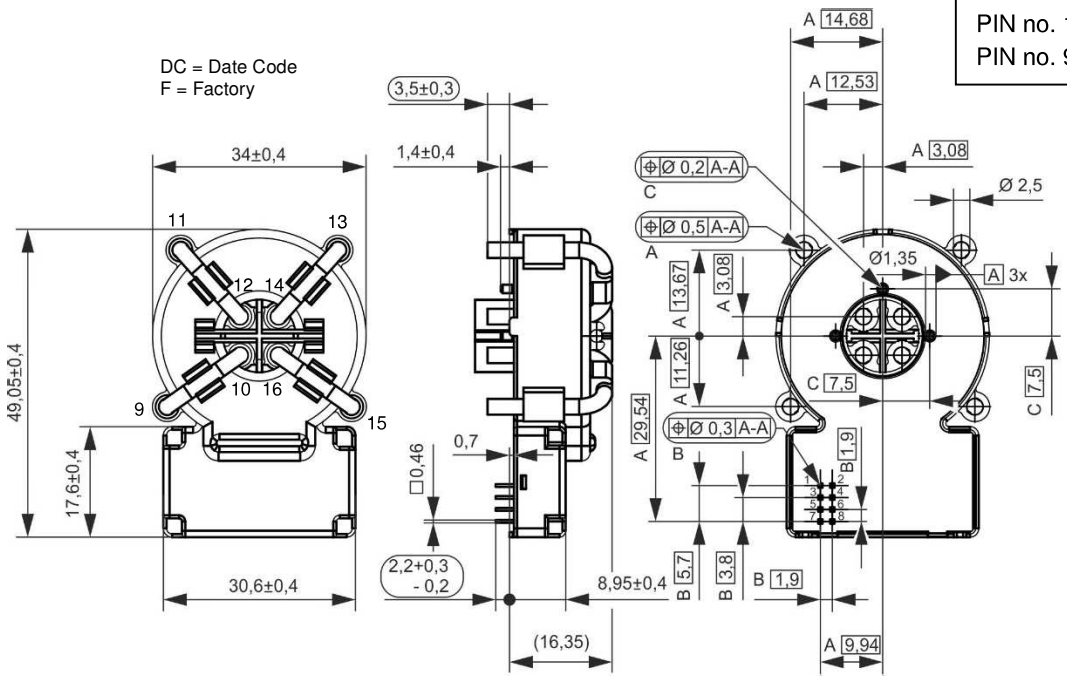

Content of Data-Matrix-Code is: benvac, 4641-X920-83, F, DC

Datecode Format: [YWW]
Example: J04: 2017, Week 4

PIN description:

PIN no.	Description
PIN 1 → ERROR-OUT (open collector output)	If no system fault is detected, the output PIN 1 is at low level (GND). If a system fault is detected, PIN is at high impedance state. In this case, PINs 3 and 4 will be set to a high impedance state too (see tab.1).
PIN 2 → TEST-IN (refer to Fig. 2)	A function test including an offset measurement (this value is stored in EEPROM for further calculation) is activated if this PIN is connected to GND for a period of 40ms to 1.2s. If the PIN is set to GND less than 40ms or more than 1.2s, no function test will be performed. **Attention:** During the functional test and offset measurement, no differential current shall flow. To ensure high accuracy of the sensor this test shall be activated at regular intervals (e.g. at startup, before measuring…). If a push-pull switch is used, the voltage range must be 0V…5V.
PIN 3 → X6-OUT (open collector output)	If the residual current is below 6mA dc and no system fault occurs the output on PIN 3 is a low level (GND). In any other case output PIN 3 is in a high impedance state. If PIN 4 is high impedance, PIN 3 will also be set to high impedance (see tab. 1).
PIN 4 → X30-OUT (open collector output)	If the residual current is below the 30mA rms and no system fault occurs the output on PIN 4 is a low level (GND). In any other case PINs 3 and 4 are in a high impedance state (see tab. 1).
PIN 5 → GND	Ground connection
PIN 6 → VCC	Positive supply voltage
PIN 7 → PWM-OUT	Acc. to the DC component of residual current a duty-cycle with f=8kHz is generated. This is for monitoring purposes only and shall not be used to switch the power relay. Refer to $S_{PWM\text{-}OUT}$ = 3.33%/mA
PIN 8 → N.C.	Not connected
PIN 9 – 16	For primary wires connection

Typical application diagram:

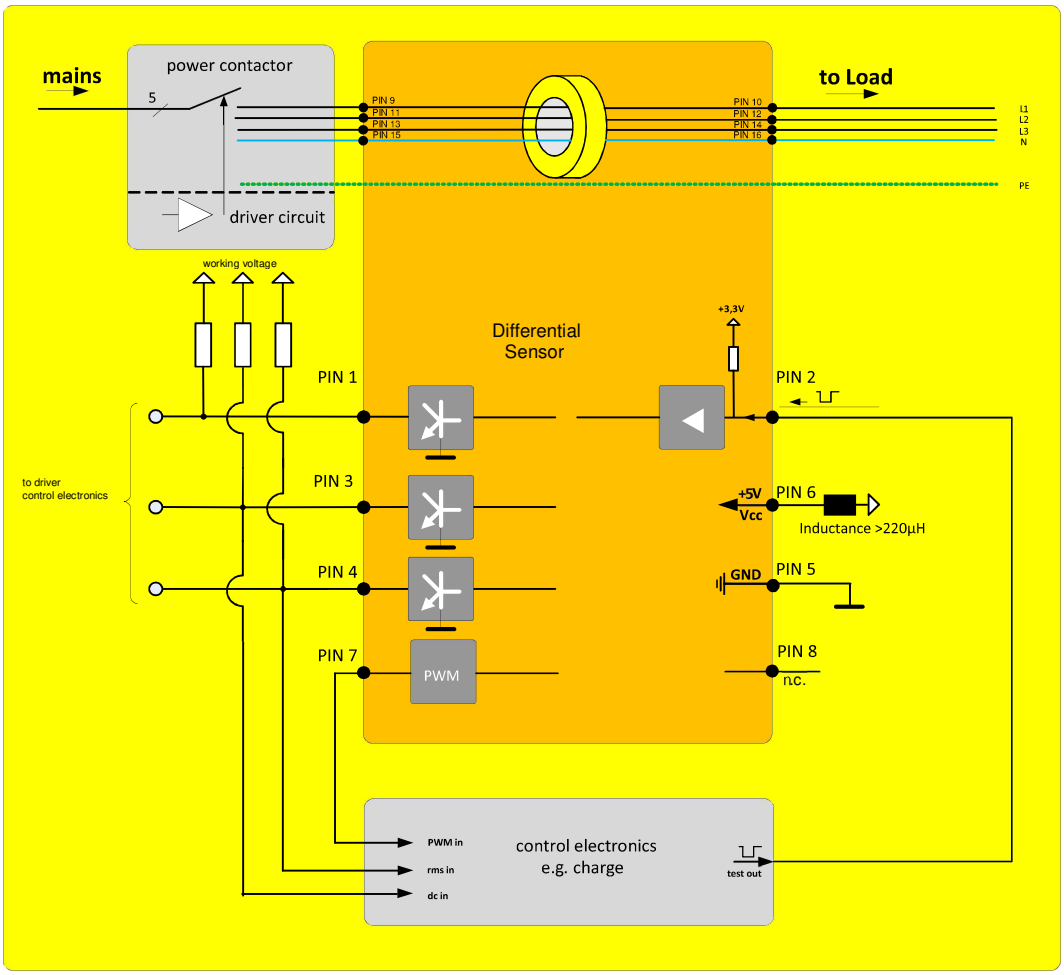

Absolute maximum ratings[8]:

		Min	Typ.	Max	Unit
V_{CE}	Collector-Emitter voltage (PINs 1, 3 and 4)			40	V
I_C	Collector current (PINs 1, 3 and 4)			50	mA
V_{CC}	Maximum supply voltage (without function)	-0.3		7	V
U_{MAX}	Maximum rated voltage of primary conductors			440	V
$V_{TEST\text{-}IN,\ low}$	TEST-IN Input Voltage, low level	0		0.6	V
$V_{TEST\text{-}IN,\ high}$	TEST-IN Input Voltage, high level	2.5		5	V

[8] Stresses above these ratings may cause permanent damage.
Exposure to these conditions for extended periods may degrade device reliability.
Functional operation of the device at these or any other conditions beyond those specified is not supported.

Final Tests: (Measurements after temperature balance of the samples at room temperature, SC=significant characteristic)

		Min.	Max.	Unit
Vcc	Supply voltage	4.9	5.1	V
Icc	Supply current	38.0	45.0	mA
TEST-IN (SC)	TEST-IN voltage	2.8	3.4	V
X6-OUT (normal)	X6-OUT voltage	0	0.6	V
X30-OUT (normal)	X30-OUT voltage	0	0.6	V
ERROR-OUT (normal)	ERROR-OUT voltage	0	0.6	V
X6-OUT (activated)	X6-OUT voltage activated @5V, 1kΩ (pull-up)*	4.9	5.1	V
X30-OUT (activated)	X30-OUT voltage activated @5V, 1kΩ (pull-up)*	4.9	5.1	V
ERROR-OUT (activated)	ERROR-OUT voltage activated @5V, 1kΩ (pull-up)*	4.9	5.1	V
TC1	Trip current 1 – X6	4.1	5.4	mA
TC2	Trip current 2 – X6	-5.4	-4.1	mA
TC3	Trip current 3 – X30@50Hz	20	30	mA
PWM-OUT (frequency)	PWM-OUT frequency	7.8	8.2	kHz
PWM-OUT (duty-cycle)	PWM-OUT duty-cycle @6mA DC	18	22	%
LV1	Limit values of break time - X6-OUT@6mA DC	0	700	ms
LV2	Limit values of break time - X6-OUT@30mA DC	0	500	ms
LV3	Limit values of break time - X30-OUT@30mA, 50Hz	0	300	ms
LV4	Limit values of break time - X30-OUT@150mA,50Hz	0	40	ms

* the maximum values of collector-emitter voltage and current see “Absolute maximum ratings”

Product Tests:

	Acc. to VAC sheet M3238 Following tests differ from M3238: 3.4a: Rapid change of temperature for 300 cycles 4.5a: Damp heat, steady state. Duration: 1000 h	passed	
PD	IEC61000-4-1, EN60270, M3024 UPDE M3024, Partial discharge voltage (extinction) *acc. to table 24	1.5	kV rms
ESD	Air- and contact discharge; U=±2000V, R=1500Ω, C=100pF Acc. to Human Body Model JESD22-A114	±2.0	kV
EMC	IEC61000-4-3 (Radiated, radio-frequency, electromagnetic field immunity) 20V/m 80MHz – 1GHz 80%AM 1kHz, recommend with the use of inductance of >220µH in series of Vcc input.	passed	
	CISPR14-1 (Immunity to conducted disturbances), recommend with the use of inductance of >220µH in series of Vcc input.	passed	
	IEC61000-6-4 (Emission standard for industrial environments, conducted disturbances)	Should be done in end application	
A(f), Φ(f)	Amplitude and phase response over frequency 1% of I_{PN} or $I_{\Delta n}$	passed	
Impulse test	Monitoring of CS function during the current phase test 100A to 5kA	passed	

Requalification Tests: (replicated every year, Precondition acc. to M3238)

$\hat{U}_{W,\ prim\text{-}sec}$	M3064	Impulse test (1.2µs/50µs waveform) PIN 1-8 vs. PIN 9-14 5 pulse ➔ polarity +, 5 pulse ➔ polarity -	5.5	kV
$\hat{U}_{W,\ prim\text{-}prim}$	M3064	Impulse test (1.2µs/50µs waveform) PIN 9 vs. PIN 11, PIN 11 vs. PIN 13, PIN 13 vs. PIN 15, PIN 15 vs. PIN 9 5 pulse ➔ polarity +, 5 pulse ➔ polarity -	4.0	kV
U_d	M3014	Test voltage, 60s PIN 1-8 vs. PIN 9-16	1.5	kV
$U_{d,\ prim\text{-}prim}$	M3014	Test voltage between primary conductors, 5s PIN 9 vs. PIN 11,PIN 11 vs. PIN 13, PIN 13 vs. PIN 15, PIN 15 vs. PIN 9	1.5	kV
U_{PDE}	M3024	Partial discharge voltage (extinction) PIN 1-8 vs. PIN 9-16 *acc. to table 24	1.2	kV rms
U_{PD} x 1.875	M3024	Partial discharge voltage (extinction) PIN 1-8 vs. PIN 9-16 *acc. to table 24	1.5	kV rms

* IEC 61800-5-1:2007

Other instructions:

- Temperature of the primary conductor should not exceed 105°C.
- Vcc during Test-IN function test must be in rated range.
- Fall- and rise-time of Vcc: t > 10µs/V

Figures:

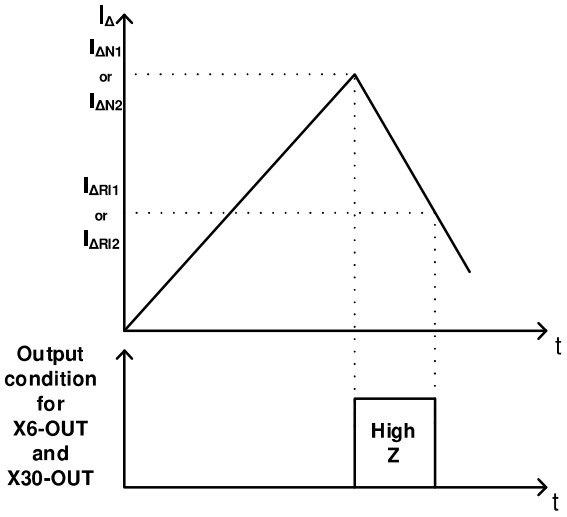

Fig. 1: Meaning of switching recovery level

If the trip-level $I_{\Delta N1}/I_{\Delta N2}$ is accomplished the corresponding output X6-OUT/X30-OUT will change its state from low-level (GND) to high impedance. Depending on the existence of the differential current I_Δ, the outputs X6-OUT/X30-OUT will remain in their states until I_Δ is below the recovery threshold $I_{\Delta RI1}/I_{\Delta RI2}$.

Timing diagram for functional test

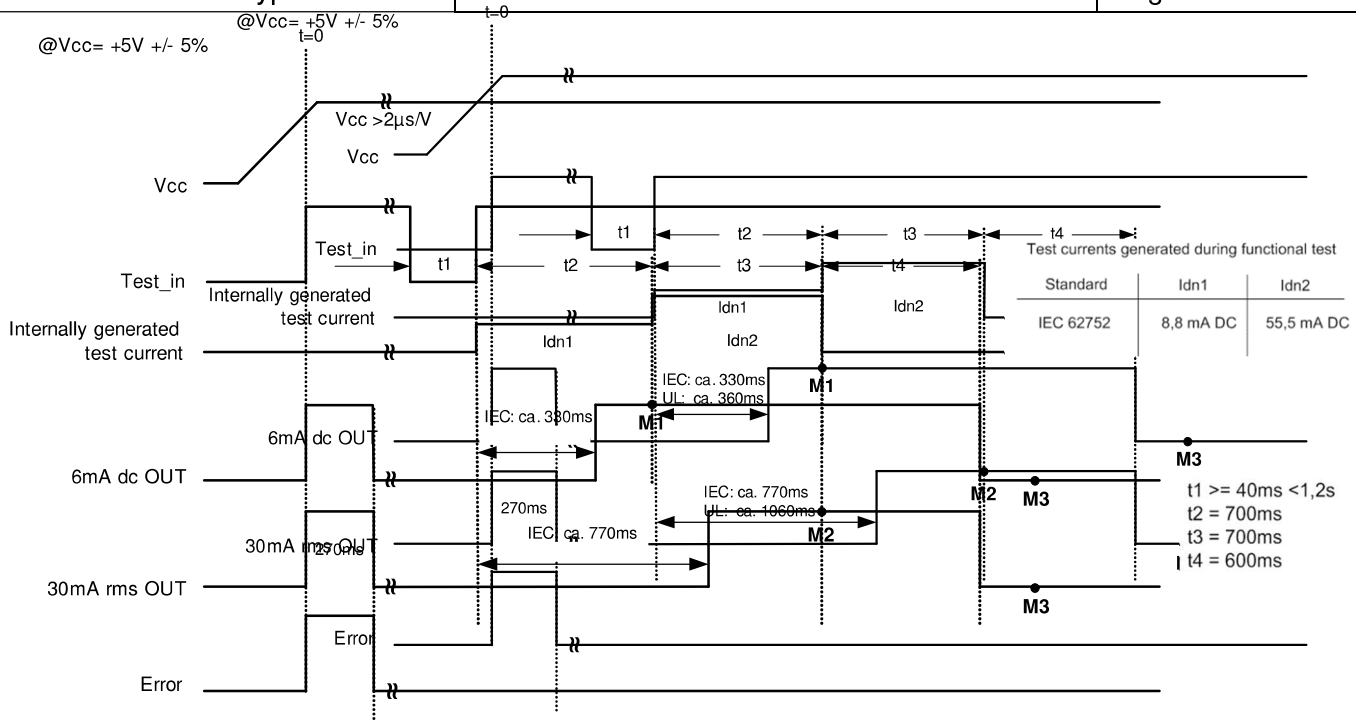

Test currents generated during functional test

Standard	Idn1	Idn2
IEC 62752	8,8 mA DC	55,5 mA DC

After activating the test sequence, the end product has to monitor the correct state of the switching outputs being used at the following points in time:

M1: check that 6mA dc OUT is disabled (latest time)
M2: check that 30mA rms OUT is disabled
M3: check that 30mA rms OUT resp. 6mA dc out is enabled

Fig. 2: Power-Up timing diagram

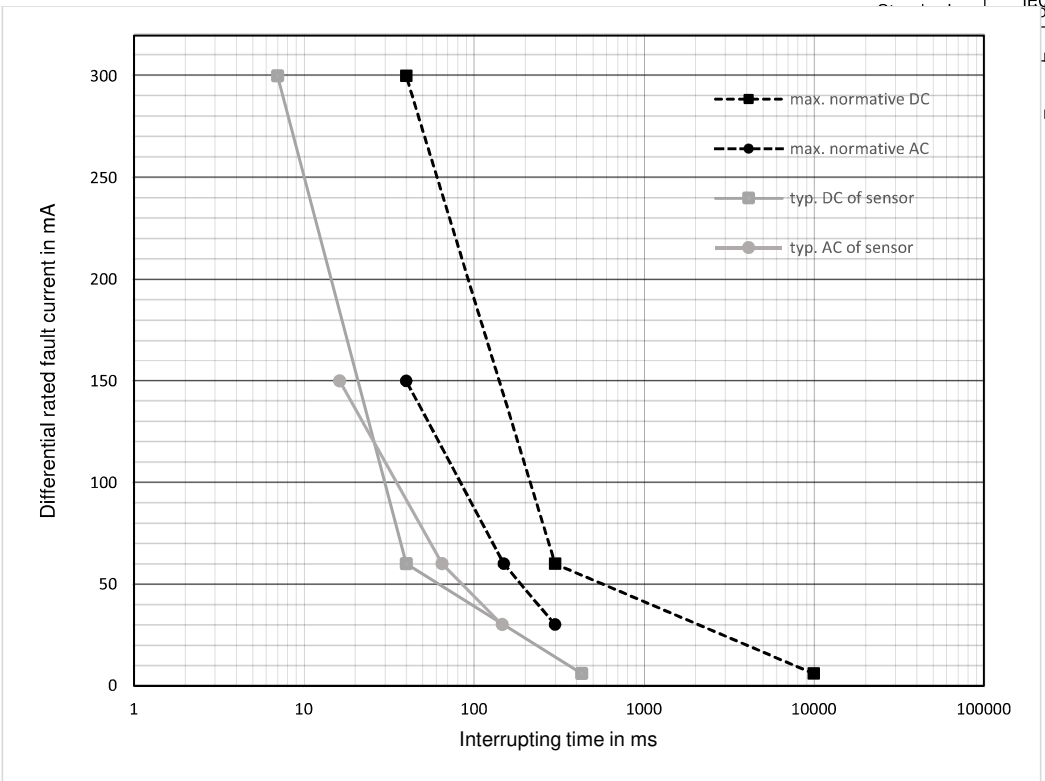

Fig. 3: Interrupting Time according to IEC62752 (E)-1:2016 Table 2 + 3 and typical values of sensor

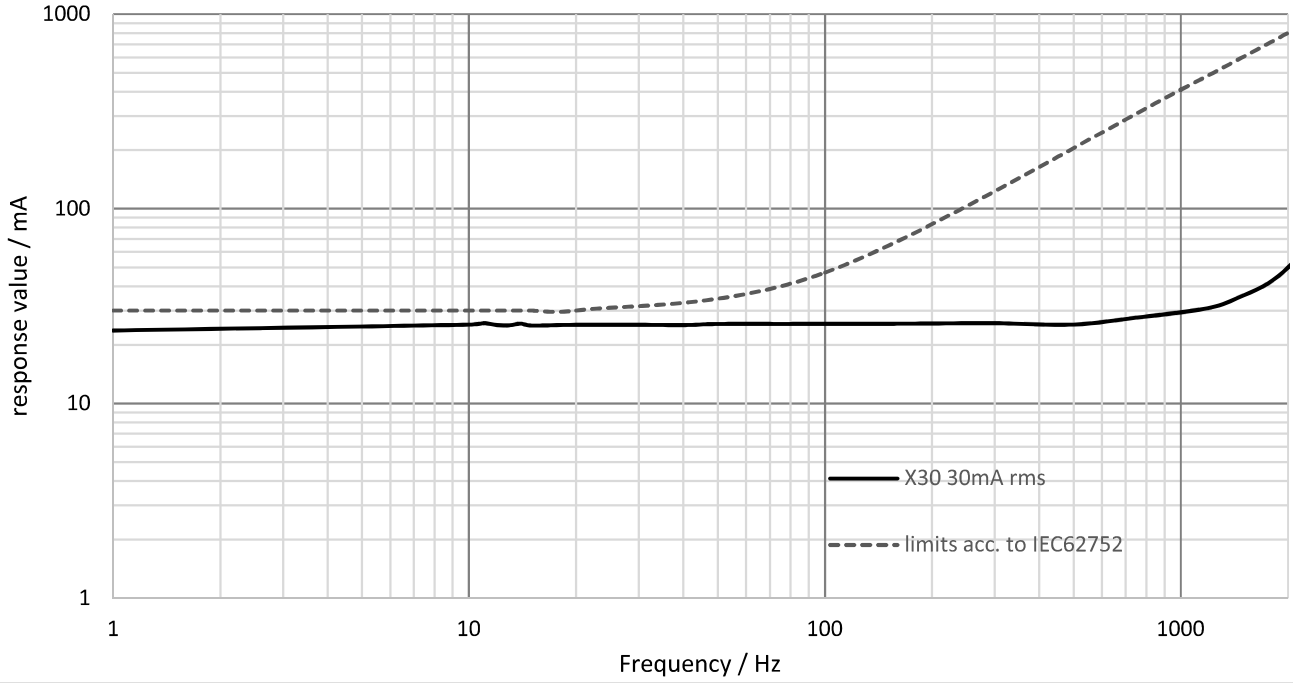

Fig. 4: Response value over frequency

X6-OUT	X30-OUT	ERROR-OUT	State
GND	GND	GND	Normal condition
High impedance	GND	GND	$I_{\Delta N1} \geq 6mA_{DC}$
High impedance	High impedance	GND	$I_{\Delta N2} \geq 30mA_{rms}$
High impedance	High impedance	High impedance	Error, system fault
All other conditions not mentioned in the table are not possible. If these conditions occur, the sensor is in unknown state and describes an Error.			

Table 1: Possible output states