Unauthorized reproduction of this drawing is not permitted.
This drawing contains proprietary and confidential information.

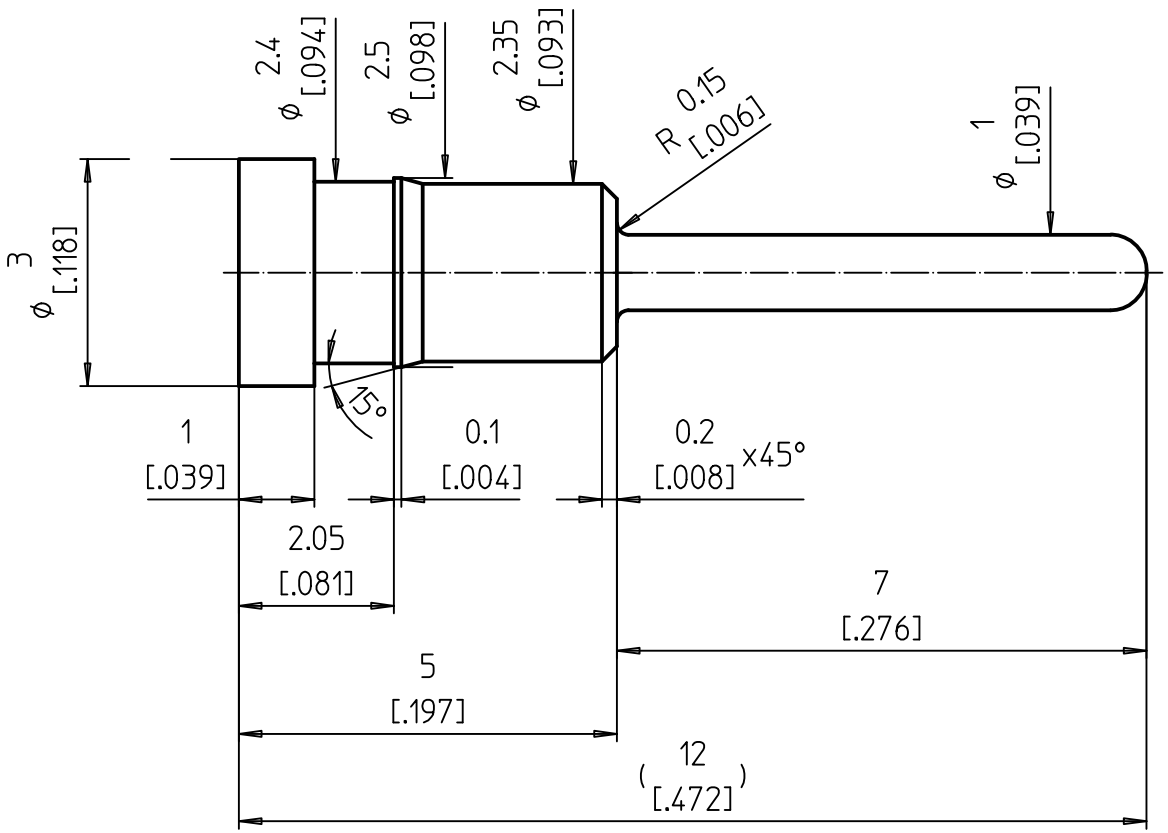

		Remplace:		
		Remplacé par:		
Pad Contact	10:1	Dessiné	12.01.2024	C.Bidault
		Contrôlé		
preci-dip swiss world connects		N° dessin		Révision
		50341-PP		