PASTERNACK
an INFINITE brand

NEX10 Male Low PIM Connector Solder Attachment for TFT-402, TFT-402-LF

RF Connectors
Technical Data Sheet

TIMES MICROWAVE SYSTEMS

TC-402-NX10M-LP

Times Microwave Systems Connector Specification

Configuration

- NEX10 Male Connector
- 50 Ohms
- Straight Body Geometry
- Connector Interface Types: TFT-402, TFT-402-LF
- Low PIM Design

Features

- Max. Operating Frequency 6 GHz
- Good VSWR of 1.3:1
- PIM levels lower than -160 dBc
- Silver Plated Brass Contact
- 100 µin contact plating

Applications

- General Purpose Test
- Wireless Communications
- Custom Cable Assemblies
- Low PIM Applications
- Distributed Antenna Systems (DAS)

Description

Pasternack's TC-402-NX10M-LP NEX10 male connector with solder/solder attachment for TFT-402 and TFT-402-LF is part of our full line of RF components available for same-day shipping. Our NEX10 male connector operates up to a maximum frequency of 6 GHz and offers good VSWR of 1.3:1. The NEX10 male connector also has low passive intermodulation of -160 dBc.

Our NEX10 male connector TC-402-NX10M-LP datasheet specifications and drawing with dimensions are shown below in this PDF. Pasternack's broad catalog of RF, microwave and millimeter wave connectors allows designers to configure and customize their signal connections however they like. Whether the need is to provide an I/O for a board design, or simply create a custom cable assembly configuration, Pasternack has the right connector for the job. Pasternack can also expertly build your custom cable assemblies for you and ship same-day.

Electrical Specifications

Description	Minimum	Typical	Maximum	Units
Frequency Range	DC		6	GHz
VSWR			1.3:1	
Insertion Loss			0.24	dB
Passive Intermodulation			-160	dBc
Operating Voltage (DC)			750	Vdc
Insulation Resistance	5,000			MOhms

Electrical Specification Notes:
Insertion Loss is 0.1*sqrt(FGHz)

Click the following link (or enter part number in "SEARCH" on website) to obtain additional part information including price, inventory and certifications: NEX10 Male Low PIM Connector Solder Attachment for TFT-402, TFT-402-LF TC-402-NX10M-LP

Pasternack Enterprises, Inc. • P.O. Box 16759, Irvine, CA 92623
Phone: (866) 727-8376 or (949) 261-1920 • **Fax:** (949) 261-7451
Sales@Pasternack.com • Techsupport@Pasternack.com

© 2020 Pasternack Enterprises All Rights Reserved

NEX10 Male Low PIM Connector Solder Attachment for TFT-402, TFT-402-LF

Mechanical Specifications

Size

Length	0.866 in [22 mm]
Width/Dia.	0.472 in [11.99 mm]
Mating Cycles	100 Cycles
Mating Torque	9 in-lbs [1.02 Nm]
Cable Retention Force	56 lbs [25.4 kg]

Material Specifications

Description	Material	Plating
Contact	Brass	Silver 100 µin
Insulation	PTFE	
Body	Brass	Silver 100 µin
Coupling Nut	Brass	Tri-Metal 100 µin
Gasket	Silicone Rubber	

Environmental Specifications

Temperature

Operating Range	-40 to +125 deg C
Shock	MIL-STD 202G, Meth. 213, Cond. I
Vibration	MIL-STD 202G, Meth. 204, Cond. B
Thermal Shock	MIL-STD 202G, Meth. 107, Cond. B

Environmental Specification Notes:
Climatic Class: IEC 60068 55/155/56

Compliance Certifications (see product page for current document)

Plotted and Other Data

Notes:

Click the following link (or enter part number in “SEARCH” on website) to obtain additional part information including price, inventory and certifications: NEX10 Male Low PIM Connector Solder Attachment for TFT-402, TFT-402-LF TC-402-NX10M-LP

Pasternack Enterprises, Inc. • P.O. Box 16759, Irvine, CA 92623
Phone: (866) 727-8376 or (949) 261-1920 • **Fax:** (949) 261-7451
Sales@Pasternack.com • Techsupport@Pasternack.com

© 2020 Pasternack Enterprises All Rights Reserved

NEX10 Male Low PIM Connector Solder Attachment for TFT-402, TFT-402-LF

RF Connectors Technical Data Sheet

TC-402-NX10M-LP

NEX10 Male Low PIM Connector Solder Attachment for TFT-402, TFT-402-LF from Pasternack Enterprises has same day shipment for domestic and International orders. Our RF, microwave and millimeter wave products maintain a 99.4% availability and are part of the broadest selection in the industry.

Click the following link (or enter part number in “SEARCH” on website) to obtain additional part information including price, inventory and certifications: NEX10 Male Low PIM Connector Solder Attachment for TFT-402, TFT-402-LF TC-402-NX10M-LP

URL: https://www.pasternack.com/nex10-male-tft-402-connector-tc-402-nx10m-lp-p.aspx

The information contained in this document is accurate to the best of our knowledge and representative of the part described herein. It may be necessary to make modifications to the part and/or the documentation of the part, in order to implement improvements. Pasternack reserves the right to make such changes as required. Unless otherwise stated, all specifications are nominal. Pasternack does not make any representation or warranty regarding the suitability of the part described herein for any particular purpose, and Pasternack does not assume any liability arising out of the use of any part or documentation.

Pasternack Enterprises, Inc. • P.O. Box 16759, Irvine, CA 92623
Phone: (866) 727-8376 or (949) 261-1920 • **Fax:** (949) 261-7451
Sales@Pasternack.com • Techsupport@Pasternack.com

© 2020 Pasternack Enterprises All Rights Reserved

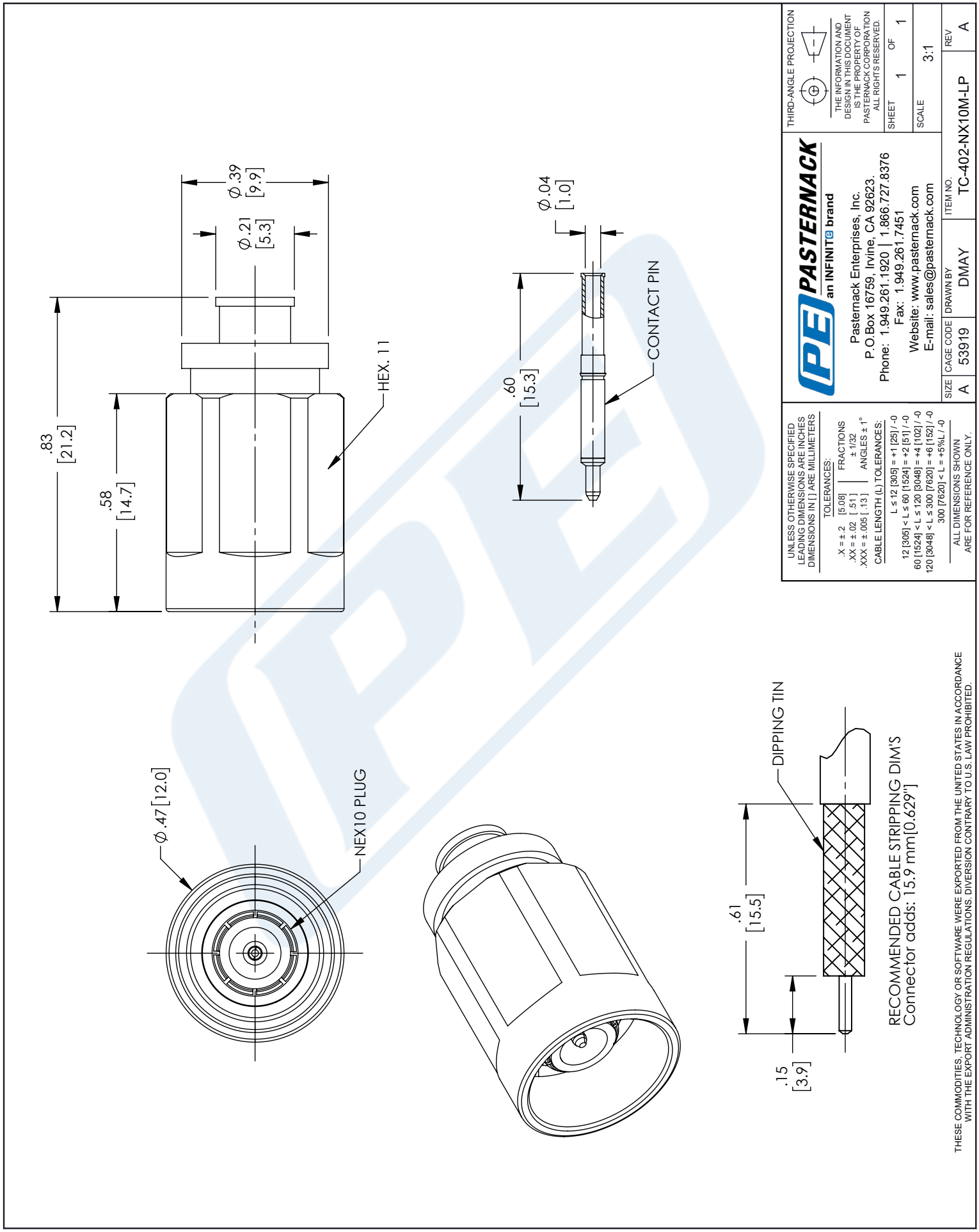

© 2020 Pasternack Enterprises All Rights Reserved