PRODUCT NUMBER	PCB THICKNESS	DIM A	DIM B	IMPEDANCE
70200–001LF	1.6	5.90	5.58	50 ohms
70200–002LF	2.4	6.70	6.38	50 ohms
70200–003LF	3.2	7.50	7.18	50 ohms
70200–004LF	4.0	8.30	7.98	50 ohms
70200–005LF	4.8	9.20	8.78	50 ohms
70200–006LF	5.6	9.90	9.58	50 ohms

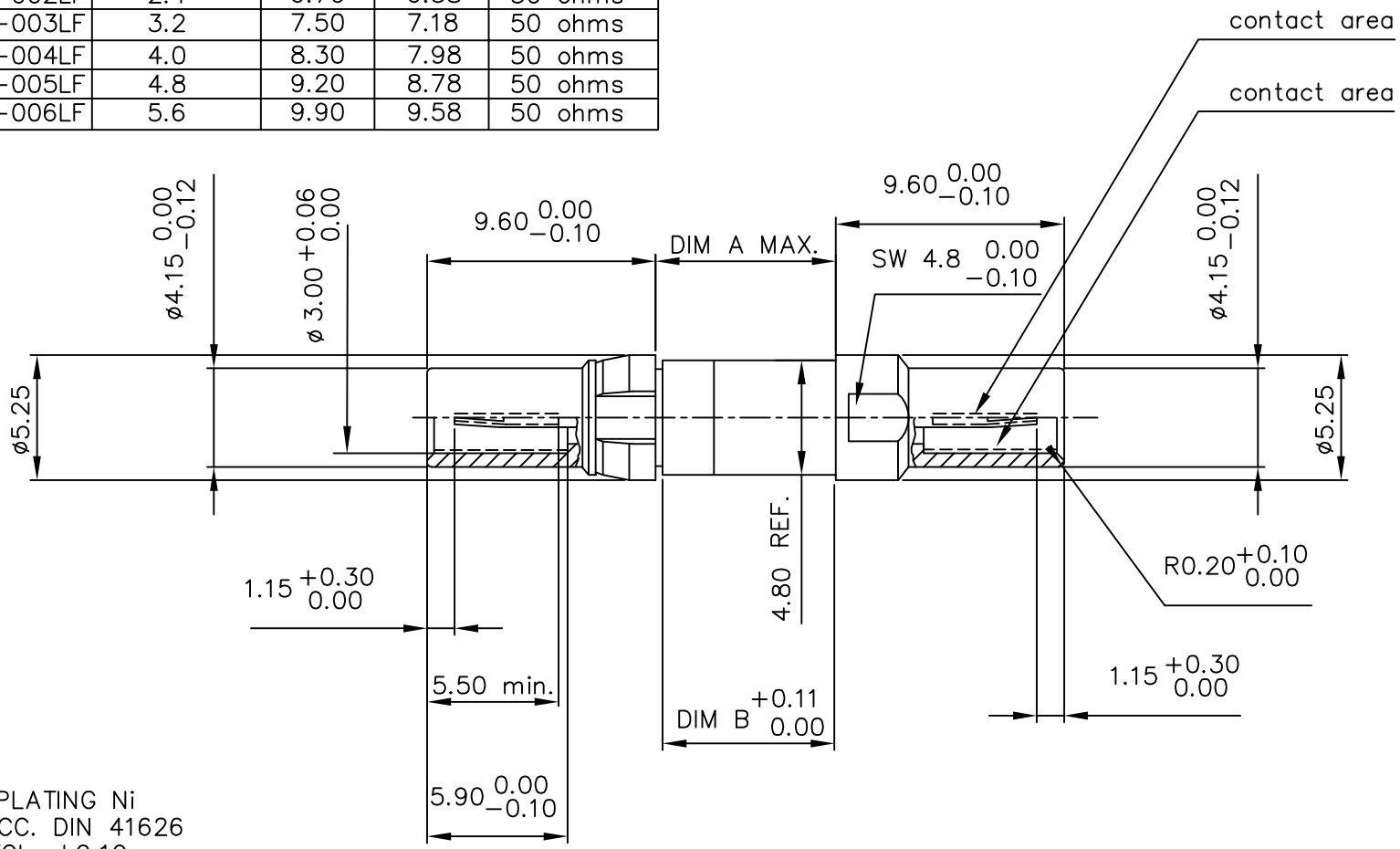

NOTES:
1 UNDERPLATING Ni
2 DIM. ACC. DIN 41626
3 GEN. TOL. ±0.10
4 THIS PRODUCT WITH "LF" SUFFIX MEETS EURPOEAN UNIONDIRECTIVES AND OTHER COUNTRY REGULATIONS AS DESCRIBED IN GS –22–008.
5 THE PRODUCT IS NOT INTENDED TO BE EXPOSED TO A MANUFACTURE AND SOLDER PROCESS.

1.3µm Au MIN
PLATING CONTACT AREA

mat'l. code				tolerances unless otherwise specified			CUSTOMER COPY	FCI ELECTRONICS www.fciconnect.com
ltr	ecn no	dr	date					
A	H00365	DAN	900718	linear			projection	title FEMALE/FEMALE Coax Coupler 50ohms
B	H00367	DAN	900731					
C	H00495	DAN	901022	angles				
D	H20350	DAN	920305	dr	D ANDREWS	900718	mm	product family METRAL(tm) code 213
E	H50483	RVI	950828	engr	P SCHALK	950821		size A3 dwg no 70200
F	DG05–0342	CLU	050920	chr	A v Zanten	900718	scale 5:1	sheet 1 of 1
				appd	H v Woensel	900718		
sheet index	revision sheet	F 1						

Tous droits strictement reserves. Reproduction ou communication a des tiers interdite sous quelque forme que ce soit sans autorisation ecrite du propietaire. Propriete de F C I b.v. ©F C I b.v.
All rights strictly reserved. Reproduction or issue to third parties in any form whatever is not permitted without written authority from the proprietor. Property of F C I b.v. ©F C I b.v.