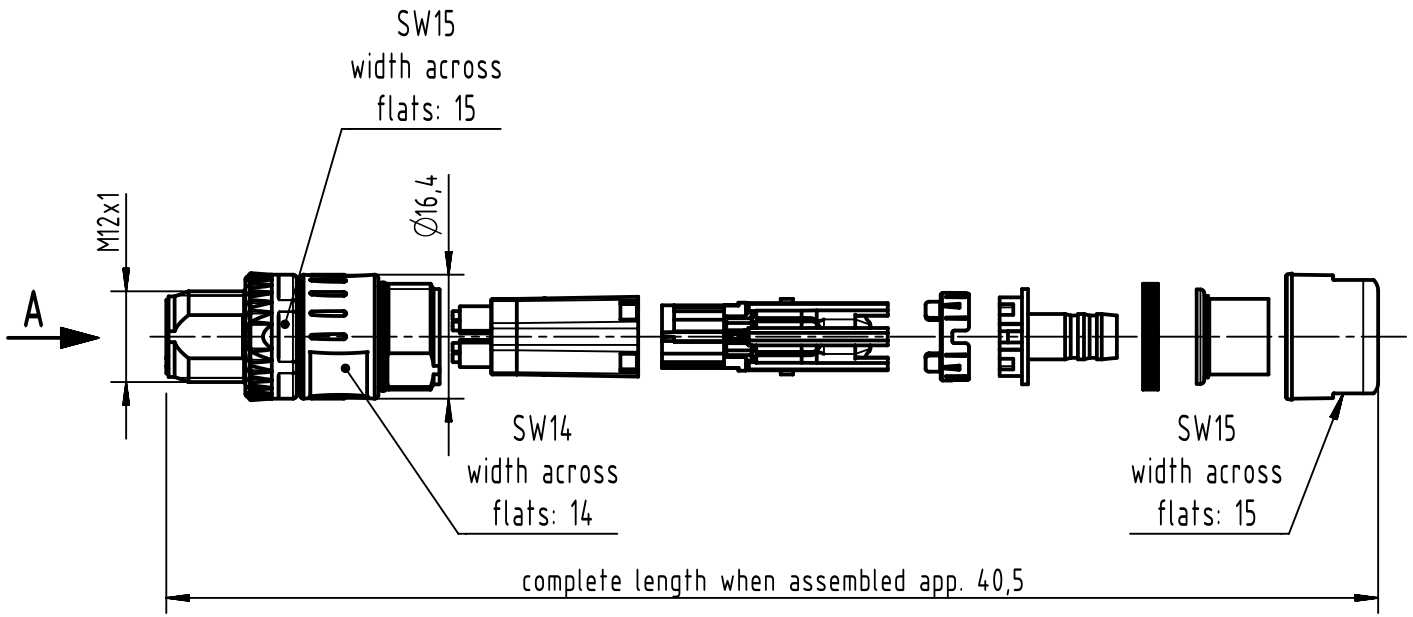

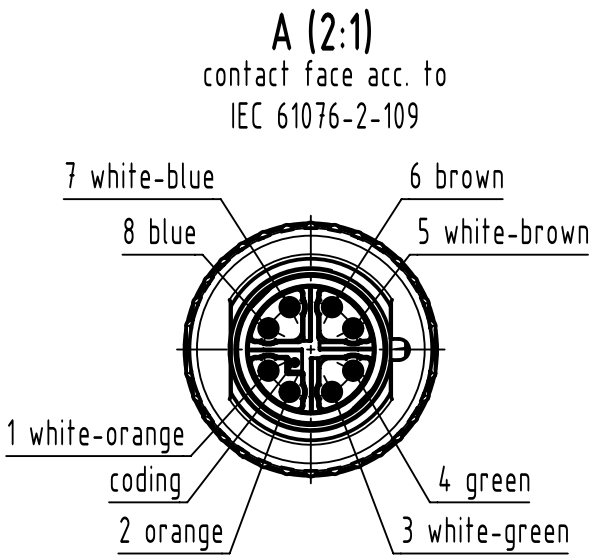

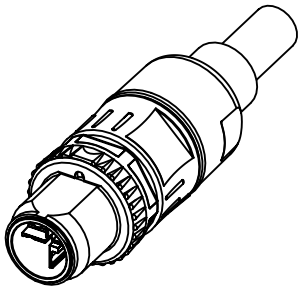

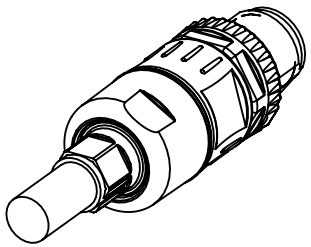

order contacts separately

Cable description	Cable diameter	Wire gauge	P/N contact	P/N Crimping insert	P/N Crimping Tool	P/N Mounting tool
RSCC TD-010331 4PR 4x2xAWG24 7/32 CAT 5E 100 OHMS	6,5-6,8mm	AWG 28-24 AWG 26-23	21 01 100 9014 21 01 100 9019	0999 000 0658	0999 000 0647	0999 000 0639

All Dimensions in mm
Original Size DIN A4

Scale 1:1

Free size tol.

Ref.

Sub.

All rights reserved

Department EL PD

Created by SERBANA | Inspected by FARCASIU | Standardisation ROEBEN | Date 2023-10-20 | State Final Release

Title M12-SD-CC-CRIMP-8P-XCOD-M-STR-CF

Doc-Key / ECM-Nr. 100923708/UGD/001/C 500000254532

HARTING
D-32339 Espelkamp

Type TB | Number 21038811814 | Rev. C | Page 1/1

A4