EPG.1B.30 __.HLN

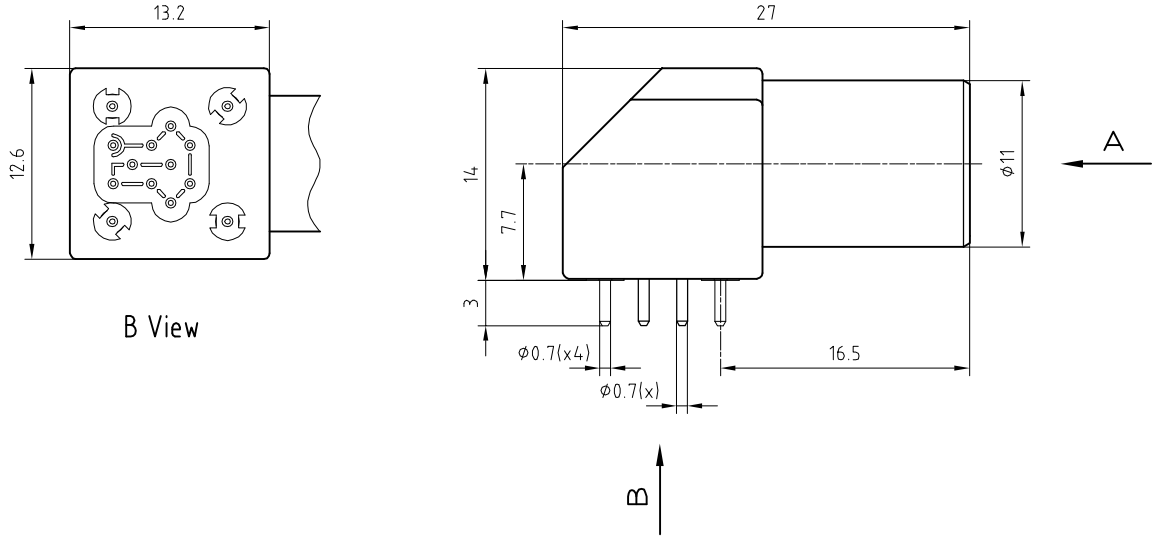

Outer shell	: Brass (UNS C38500)	Nickel plated (FS-QQ-N-290A)
Earthing crown	: Bronze (UNS C54400)	Nickel plated (FS-QQ-N-290A)
Insulator	: PEEK	-
Female contact	: Bronze (UNS C54400)	Gold plated (ISO 4523)
Ground pin	: Brass (UNS C38500)	Gold plated (ISO 4523)
Other insulating parts	: PPS	-
Other metallic parts	: Brass (UNS C38500)	Nickel plated (FS-QQ-N-290A)

PCB drilling pattern

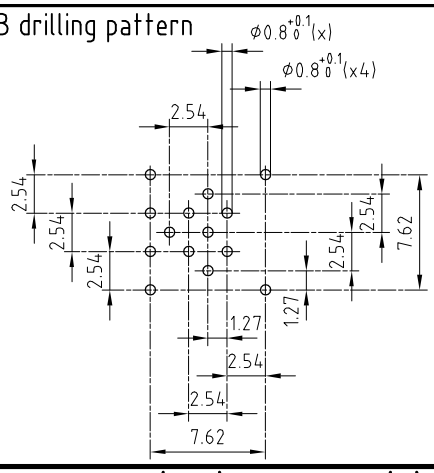

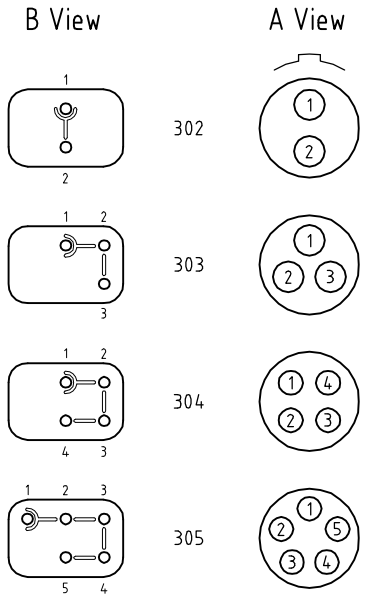

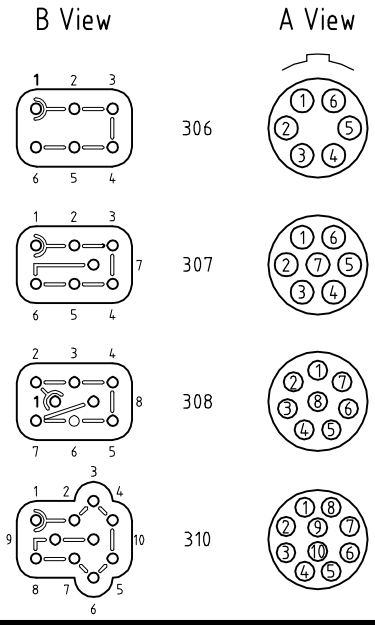

Elbow socket (90°) , with key (G) , for PCB . Series 1B , multipole	Echelle —	Dessiné	13.02.97	LMO / JCHU
		Contrôle	08.01.03	RMO / CDE
ETUDE N°		Modif.	02	08.01.03 / OVU

LEMO SA CH-1024 Ecublens

EPG.1B.3__ __.HLN