REV.	ECN NO.	DATE	SIGN	DESCRIPTION
E	C221879	2022/12/20	Ruru	E X1
F	C231032	2023/08/07	Ruru	F X1
G	C231604	2023/12/27	Hubert	G X2

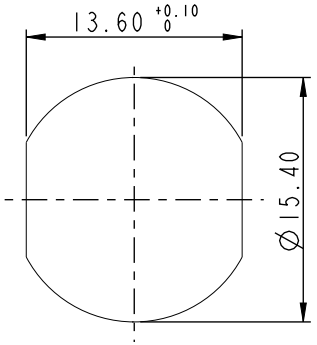

Recommended Panel Cut-Out

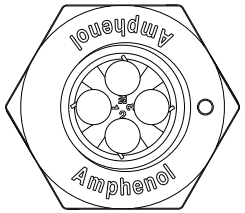

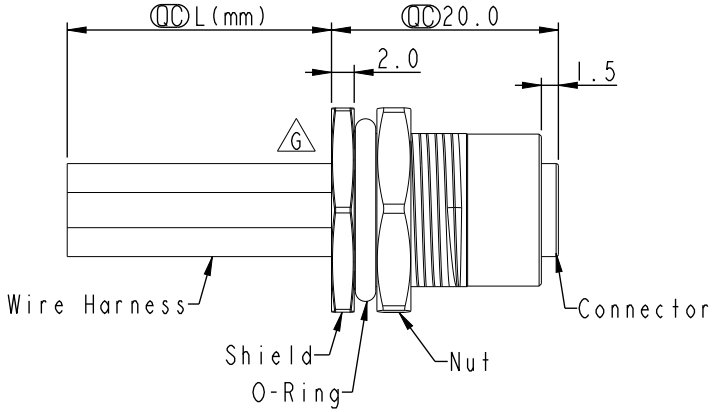

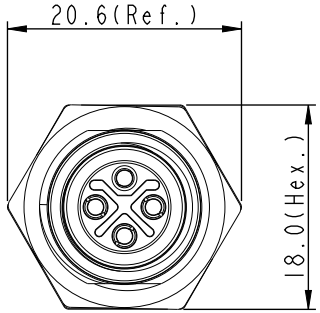

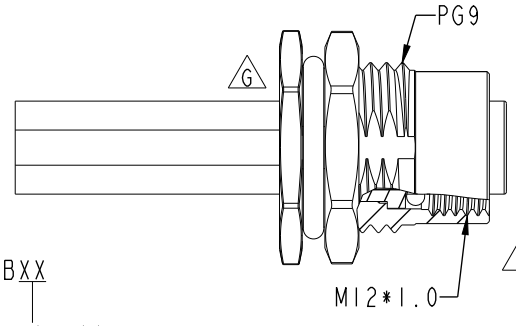

Pin #	Wire	
PE	Black	黑
3	Blue	藍
2	White	白
1	Brown	棕

Pin Out

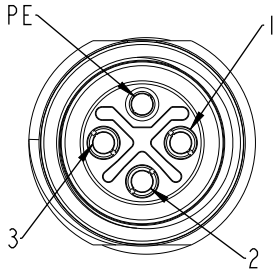

3+PE

Pin Assignments Front View

B C D

M12S-XXPFFS-SF8BXX

XX:No. Of Pin

10:100mm
15:150mm
20:200mm
∫
95:950mm
Cable Pitch Unit:50mm

A0:1000mm
∫
A5:1500mm
Cable Pitch Unit:100mm
Wire Length(L):150~1500mm

Note: B C D
* RoHS Compliant
* QC Important dimension
* E Waterproof rate: IP68, unmated 1m/24h
  F IP69K, mated
* Connector
  Housing: Thermoplastic, Black
  Pin: Copper alloy, Gold plated
  O-Ring: Rubber, Green
* Shield: Metal
* Nut: Metal
* O-Ring: Rubber, Black
* Wire harness: UL1015, 16AWG
* For panel thickness max: 4.5mm
* O-Ring and nut are assembled on connectors
* Wire harness tolerance: 100mm: ±10mm
  100mm < L ≦ 300mm: ±15mm
  300mm < L ≦ 1000mm: ±20mm
  1000mm < L ≦ 1500mm: ±50mm

UNIT:mm

TOLERANCE
.X ±0.25
.XX ±0.1
.XXX ±0.05
ANGLES ±1°

TITLE: N SEN, M12 S, SCREW RECEPTACLE, F, F, SOLDER C

SCALE 2:1 | SIZE A4 | SHEET 1 OF 1

REV. G | WC-REV. A.4 | QC: Inspection item

Amphenol LTW
安費諾亮泰企業股份有限公司

ITEM NO

DWG NO: C M12S-XXPFFS-SF8BXX

CUSTOMER: ALTW

DRAWN BY: Hubert | DATE: 2023/12/27

CHECKED BY: Neo | DATE: 2023/12/27

APPROVED BY: Fred | DATE: 2023/12/27

W10814-03-[redacted]01A2

THIS DOCUMENT IS SUBJECT TO CHANGE WITHOUT NOTICE. IT IS CONFIDENTIAL AND A PROPERTY OF Amphenol LTW. DISCLOSURE TO THIRD PARTY HAS TO BE AUTHORIZED BY Amphenol LTW.