CLIFF

3.5mm JACK SOCKET

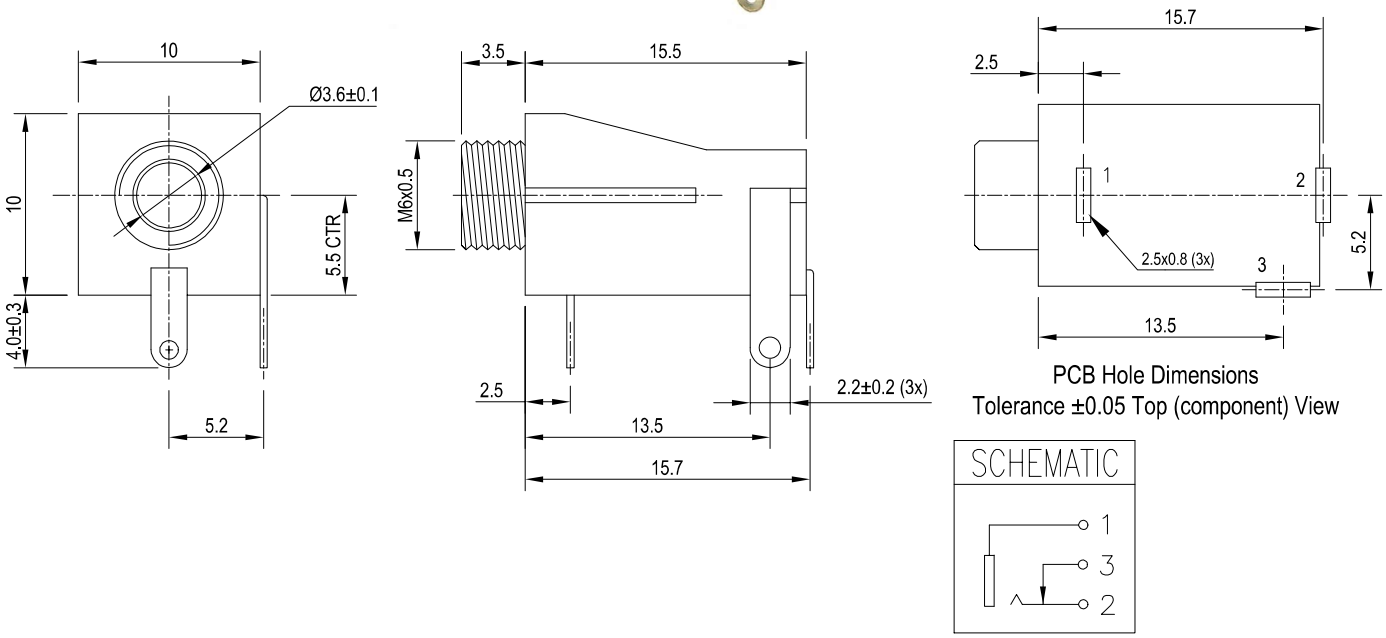

This is a 3.5mm Mono Switched jack socket with a metal nose. Right angle PC mounting. Supplied with a metal ring nut.

Specification

1. Current Rating 12V DC / 1A
2. Contact Resistance: 30mΩ max
3. Insulation Resistance: 100MΩ min at 500V DC
4. Dielectric Strength: 500V AC for 1 minute
5. Life: 5000+ operations
6. Operating temperature: -25°C to 70°C

Part No. **FC68118**

© CLIFF 09/2023 ISS.1

For further information, contact sales@cliffuk.co.uk

Cliff Electronic Components Limited,
76 Holmethorpe Avenue, Holmethorpe Ind. Estate,
Redhill, Surrey RH1 2PF U.K.
Tel: +44 (0)1737 771375 Fax: +44 (0)1737 766012

RoHS

www.cliffuk.co.uk