REV.	ECN NO.	DATE	SIGN	DESCRIPTION
C	LE31670040	2016/06/15	Tom_Gu	Change Part No. of Half Finished
D	C220553	2022/04/07	Vicky	D X8
E	C230087	2023/01/31	Vicky	E X1

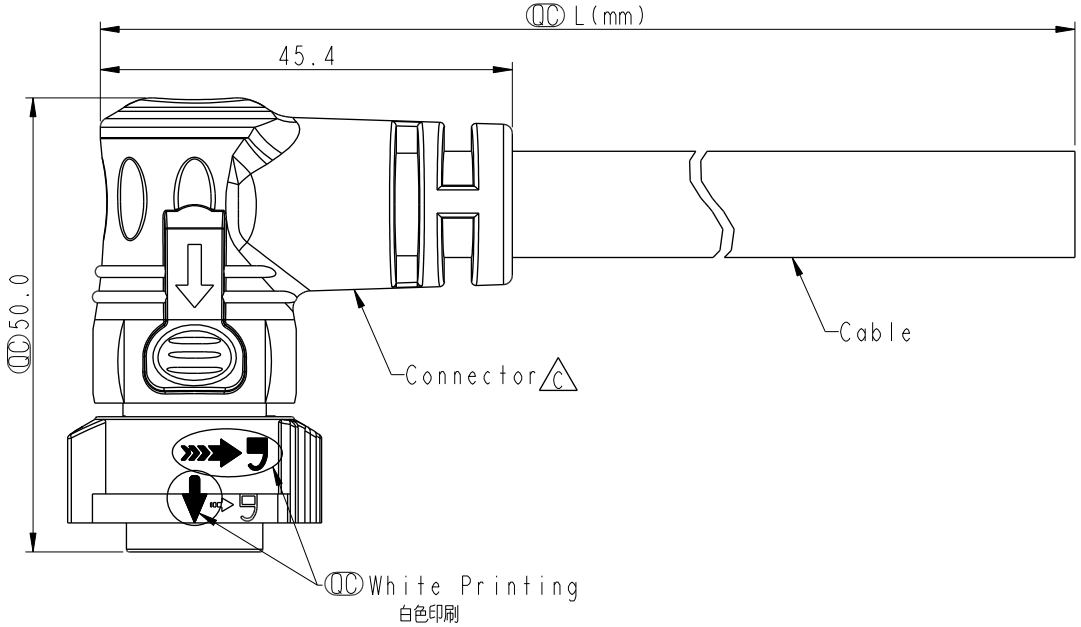

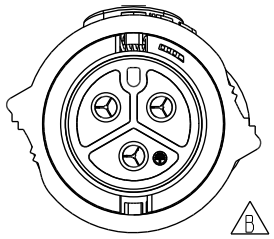

Conn.

D
Note:
* RoHS Compliant
* QC Important dimension
B E * Waterproof rate: IP68, mated 1m/24h
* Connector
  Housing: Thermoplastic, Black
  Pin: Copper alloy, Gold plated
  O-Ring: Rubber, Gray
  Nut: Thermoplastic, Black
  Outer mold: Thermoplastic, Black
* Cable: SJTW, PVC Jacket, Black
* Cable length tolerance: 1M: +50/-0 mm
  1M < L ≦ 3M: +100/-0 mm
  3M < L ≦ 5M: +150/-0 mm
  5M < L ≦ 10M: ±100 mm
  10M < L ≦ 20M: ±200 mm
  20M < L ≦ 30M: ±300 mm
  30M < L ≦ 99M: ±500 mm

UNIT: mm	TITLE: XLOK, C-20A, CABLE W/SR F, M, MOLDING, PUSH LOCK D	Amphenol LTW 安費諾亮泰企業股份有限公司	ITEM NO	DRAWN BY: Tom_Gu	DATE: 2016-06-15
TOLERANCE ±0.5mm	SCALE 6:5 / SIZE A4 / SHEET 1 OF 2		DWG NO: CC-XXAFMM-QR8EXX D	CHECKED BY: Spring_Liu	DATE: 2016-06-15
	REV. E / WC-REV. A.5	QC: Inspection item	CUSTOMER: ALTW	APPROVED BY: Kevin_Hu	DATE: 2016-06-15

THIS DOCUMENT IS SUBJECT TO CHANGE WITHOUT NOTICE. IT IS CONFIDENTIAL AND A PROPERTY OF Amphenol LTW. DISCLOSURE TO THIRD PARTY HAS TO BE AUTHORIZED BY Amphenol LTW.

Contacts	Cable OD	AWG	Item No.
3P	11.7	12	CC-03AFMM-QR8EXX
2P	10.7		CC-02AFMM-QR8EXX

D

D

CC-XXAFMM-QR8EXX

XX: No. Of Pin

XX:01~99Meters
01:01Meter
02:02Meters
:
99:99Meters

Pin Out	2P	3P
	2 White 白 1 Black 黑 Pin # Wire	3 White 白 2 Green 綠 1 Black 黑 Pin # Wire
Conn.		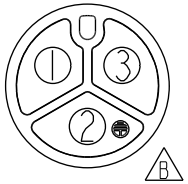
	2P	3P

D Pin Assignments Front View

B

UNIT:mm

TOLERANCE

±0.5mm

TITLE: XLOK, C-20A, CABLE W/SR F, M, MOLDING, PUSH LOCK D

SCALE 6:5 | SIZE A4 | SHEET 2 OF 2

REV. E | WC-REV. A.5 | QC: Inspection item

Amphenol LTW

安費諾亮泰企業股份有限公司

ITEM NO	DRAWN BY Tom_Gu	DATE 2016-06-15
DWG NO CC-XXAFMM-QR8EXX D	CHECKED BY Spring_Liu	DATE 2016-06-15
CUSTOMER ALTW	APPROVED BY Kevin_Hu	DATE 2016-06-15

W10814-03-RW01A2

THIS DOCUMENT IS SUBJECT TO CHANGE WITHOUT NOTICE. IT IS CONFIDENTIAL AND A PROPERTY OF Amphenol LTW. DISCLOSURE TO THIRD PARTY HAS TO BE AUTHORIZED BY Amphenol LTW.