Connector Location A

Connector Location B

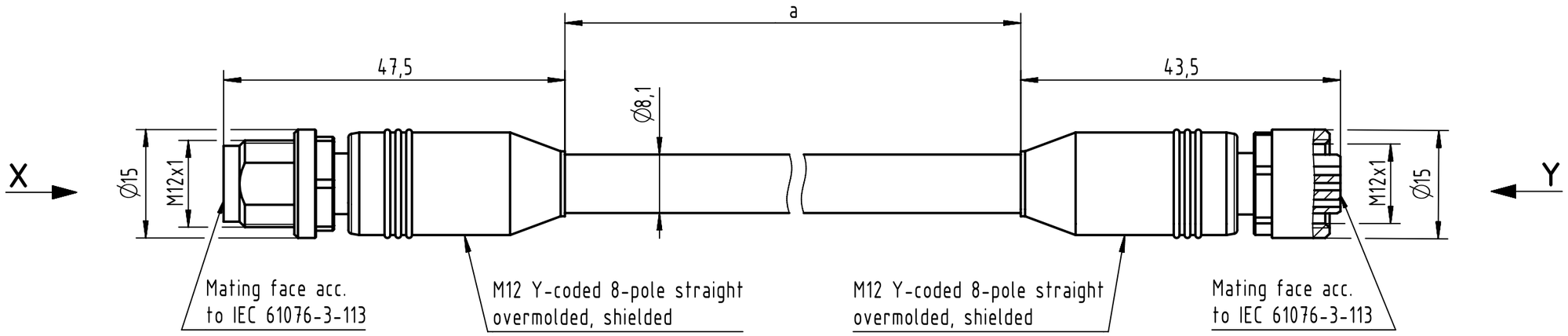

Loading Plan

X
male

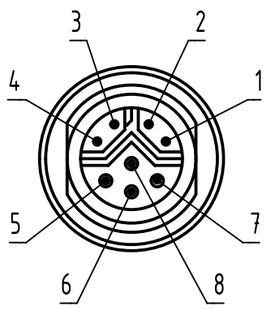

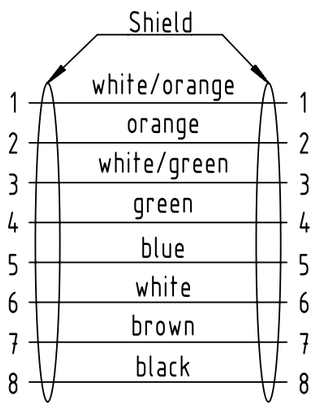

Y
female

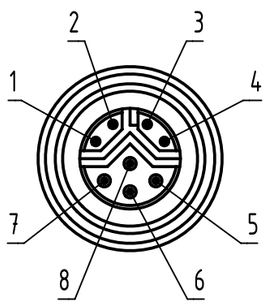

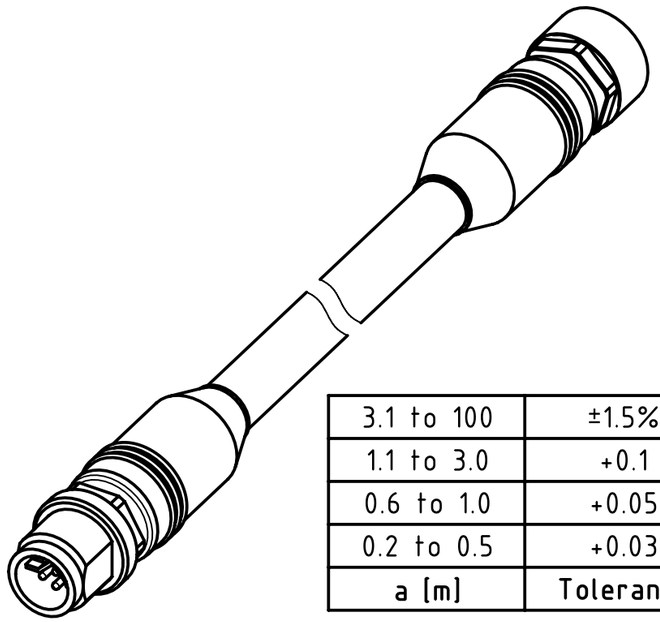

3.1 to 100	±1.5%
1.1 to 3.0	+0.1
0.6 to 1.0	+0.05
0.2 to 0.5	+0.03
a [m]	**Tolerance**

length in "1m" step	100	XXX=000
	99	XXX=990
	⋮	⋮
	12	XXX=120
	11	XXX=110
length in "0.1m" step	10	XXX=100
	9.9	XXX=099
	9.8	XXX=098
	⋮	⋮
	0.5	XXX=005
	0.4	XXX=004
	0.3	XXX=003
	0.2	XXX=002
Step	**a [m]**	**XXX**

- Protection level: IP65/67
- Temperature range: -25°C ... +80°C

Hybrid cable 4xAWG20 + 1x4xAWG26, PUR, green	21342627840XXX
Type of cable	**Part no.**

All Dimensions in mm | Tech. Character. | Free size tol. | According to production drawing

All rights reserved

Department HCS - RO

HARTING Customised Solutions
D-32339 Espelkamp

Created by	Inspected by	Standardisation	Date	State
407576 Stoica	COSTEA Costea	BANCIUD Banciu	2023-11-08	Final Release

Title: M12 Y-cod 8-pol st/st m/f PUR

Doc-Key / ECM-Nr.: 100954543/UGD/000/B 500000256967

Type: TB | Number: 21342627840XXX | Rev.: B | Page: 1/1

A3