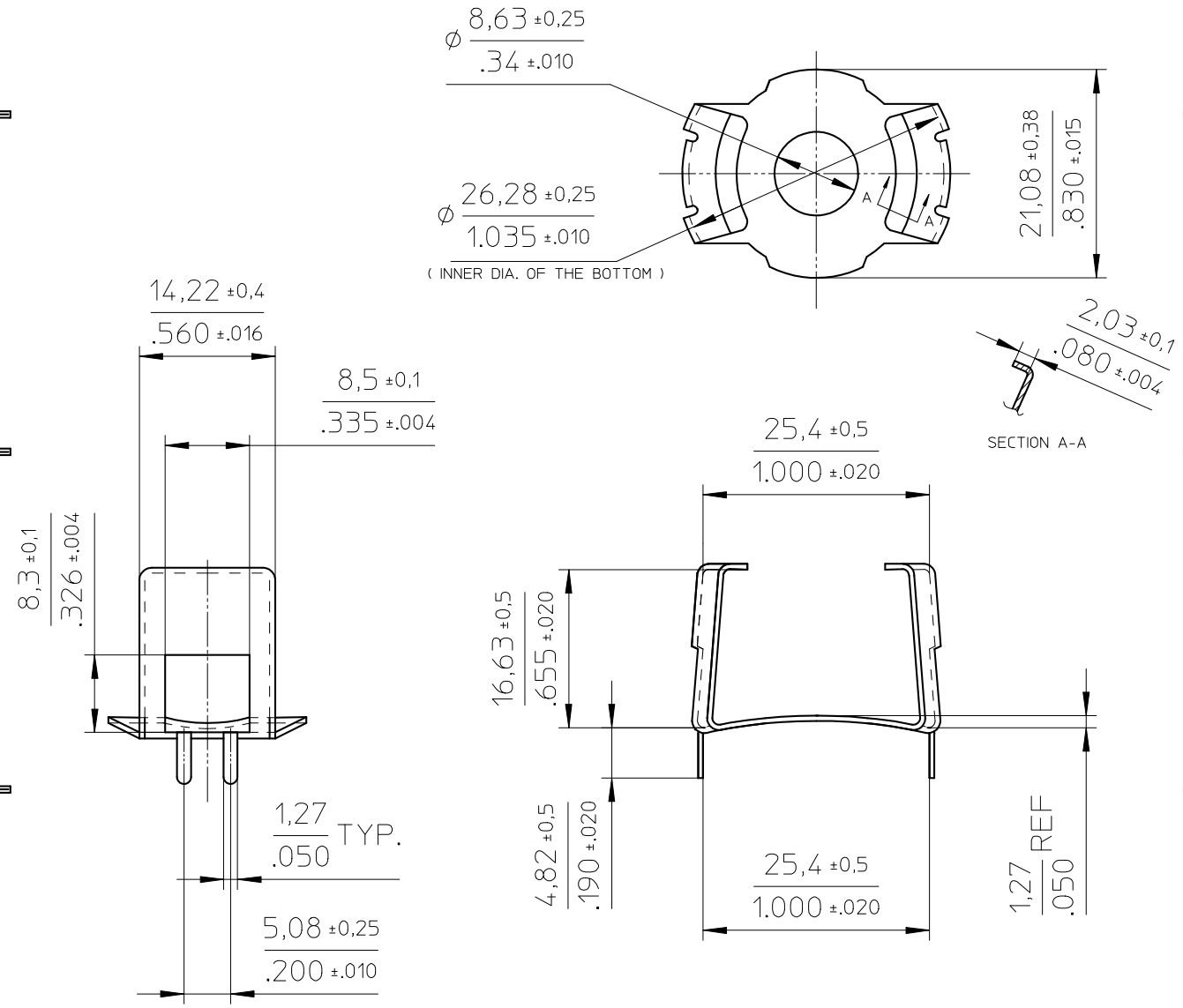

Material: High carbon steel ,thickness 0.012-0.016 inch (0,3-0,4 mm)
heat treat Hrc 42-44,
Ni flash thickness 0.00006-0.00008 inch (1,5 - 2,0 µm)
Sn electroplated thickness 0.00039-0.00059 inch (10 - 15 µm)

CLASS.NO.	CLM/TP-P26/16-C	4322 021 26331	~~2012-03-05~~ 2012-05-29
NAME NAAM M.Tryngiel	SUPERS. VERV.	SH BL. SH BL. –	A4
MPA CHECK CONTR.	DAT. 05-03-2012	Property of Eigendom van	© FERROXCUBE 2000