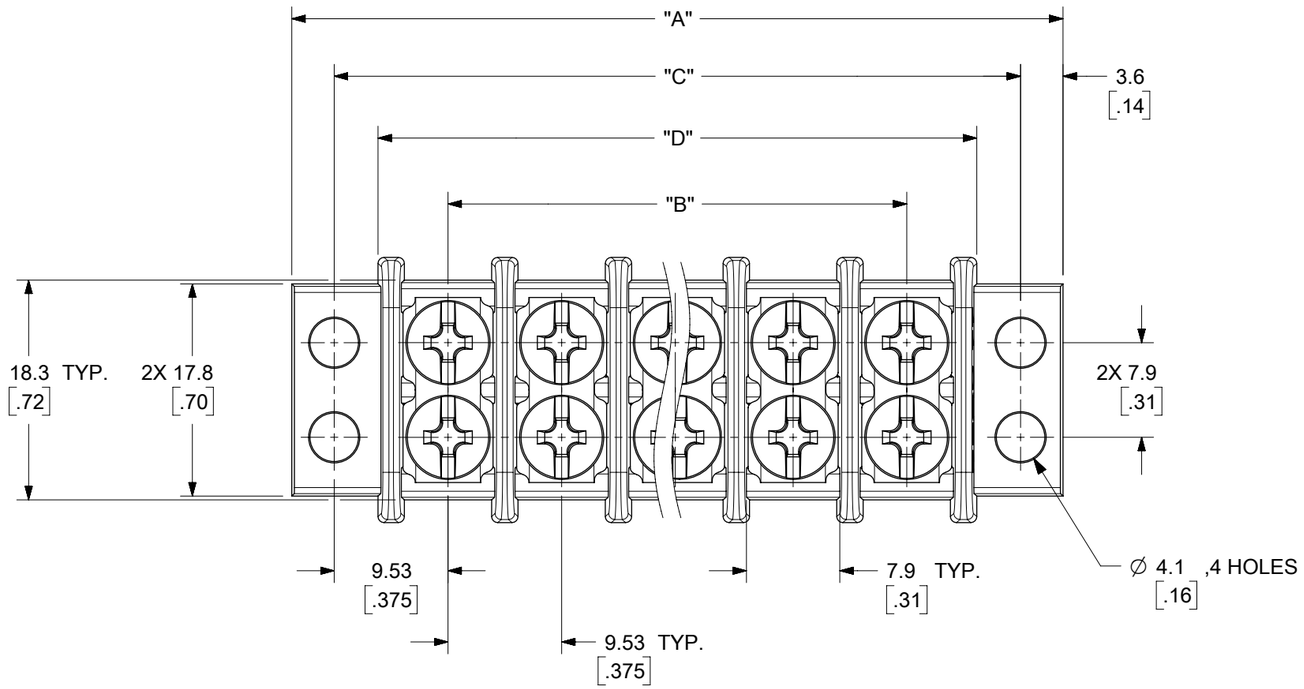

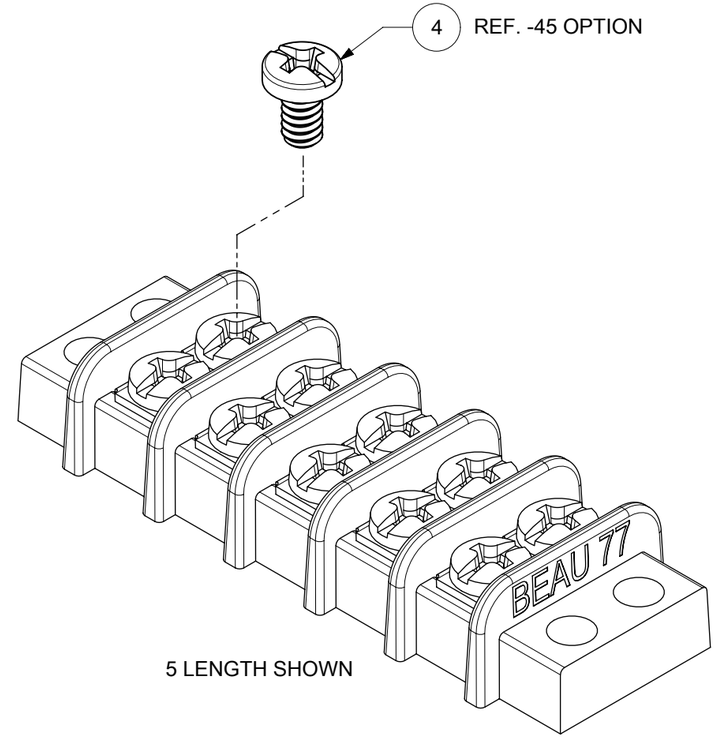

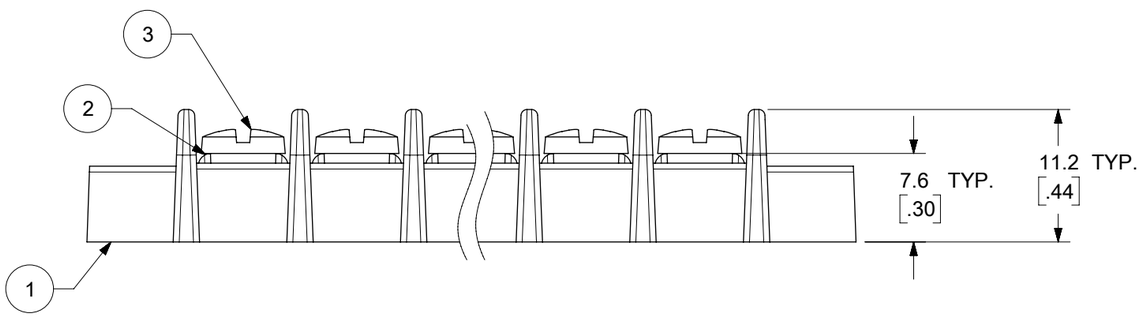

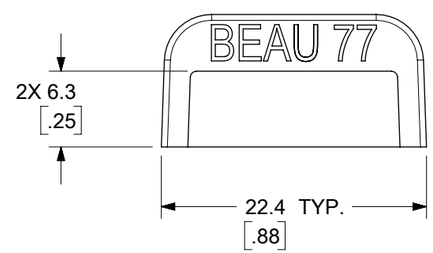

NOTES:

1. MATERIAL: SEE TABLE
2. FINISHES: SEE TABLE
3. PRODUCT SPECIFICATION: NOT REQUIRED
4. PACKAGING: NOT REQUIRED
5. MATES WITH: NONE
6. "XX" REFERS TO THE QUANTITY OF CIRCUITS.

TOLERANCES			
MM	TOL	INCH	TOL
0-6	±0.25	0-.24	±.010
>6-30	±0.40	.24-1.18	±.016
>30-120	±0.50	1.18-4.76	±.020
>120	±0.80	>4.76	±.031

ITEM	QTY.	DESCRIPTION	MATERIAL	FINISH
4	XX*2	SCREW, #6-32X.250, BIND. HD., SLOTTED	STEEL	ZN, CLEAR CHROMATE
3	XX*2	SCREW, #6-32X.250, BIND. HD., PHIL-SLOT	STEEL	ZN, CLEAR CHROMATE
2	XX	TERMINAL PLATE	BRASS	NICKEL
1	1	INSULATOR	THERMOPLASTIC	BLACK

DOCUMENT STATUS	P1	RELEASE DATE	2020/07/22 13:27:27

THIS DRAWING CONTAINS INFORMATION THAT IS PROPRIETARY TO MOLEX ELECTRONIC TECHNOLOGIES, LLC AND SHOULD NOT BE USED WITHOUT WRITTEN PERMISSION

FUNCTIONAL SYMBOLS: EA = 0, EC = 0, EP = 0

DIVISIONAL SYMBOLS

DIMENSION UNITS: MM/INCH
SCALE: 2:1

GENERAL TOLERANCES (UNLESS SPECIFIED)

	MM	INCH
4 PLACES	± ---	± ---
3 PLACES	± ---	± SEE CHART
2 PLACES	± SEE CHART	± SEE CHART
1 PLACE	± SEE CHART	± ---
0 PLACES	± ---	± ---
ANGULAR TOL	± ---	

DRAFT WHERE APPLICABLE MUST REMAIN WITHIN DIMENSIONS

CURRENT REV DESC: MIGRATED TO ECTR/NX & ADDED TOLERANCE TABLE

EC NO: 640874
DRWN: ABENJAMINLW 2020/05/15
CHK'D: MBRZOZOWSKI 2020/05/27
APPR: JFMURPHY 2020/07/22

INITIAL REVISION:
DRWN: CYORK 2004/09/27
APPR: grobertson 2004/10/01

THIRD ANGLE PROJECTION | DRAWING: B-SIZE | SERIES: 38770

molex

9.53 [.375] DOUBLE ROW
LOW PROFILE BTS ASSY

PRODUCT CUSTOMER DRAWING

DOCUMENT NUMBER	DOC TYPE	DOC PART	REVISION
SD-38770-001	PSD	001	C2

MATERIAL NUMBER	CUSTOMER	SHEET NUMBER
SEE CHART	GENERAL MARKET	1 OF 2

NO. OF CIRCUITS "XX"	DIM. "A"		DIM. "B"		DIM. "C"		DIM. "D"		ASSEMBLY MATERIAL NO. (STD.)	ASSEMBLY MATERIAL NO. (-45 OPTION)
	mm	INCH	mm	INCH	mm	INCH	mm	INCH		
2	35.7	[1.41]	9.53	[.375]	28.6	[1.13]	21.3	[.84]	387700102	387790314
3	45.2	[1.78]	19.05	[.750]	38.1	[1.50]	30.8	[1.21]	387700103	387790316
4	54.7	[2.16]	28.58	[1.125]	47.6	[1.88]	40.3	[1.59]	387700104	387790318
5	64.3	[2.53]	38.10	[1.500]	57.2	[2.25]	49.8	[1.96]	387700105	387790320
6	73.8	[2.91]	47.63	[1.875]	66.7	[2.63]	59.4	[2.34]	387700106	387790323
7	83.3	[3.28]	57.15	[2.250]	76.2	[3.00]	68.9	[2.71]	387700107	
8	92.8	[3.66]	66.68	[2.625]	85.7	[3.38]	78.4	[3.09]	387700108	387790326
9	102.4	[4.03]	76.20	[3.000]	95.3	[3.75]	87.9	[3.46]	387700109	387790328
10	111.9	[4.41]	85.73	[3.375]	104.8	[4.13]	97.5	[3.84]	387700110	
11	121.4	[4.78]	95.25	[3.750]	114.3	[4.50]	107.0	[4.21]	387700111	387790331
12	130.9	[5.16]	104.78	[4.125]	123.8	[4.88]	116.5	[4.59]	387700112	
13	140.5	[5.53]	114.30	[4.500]	133.4	[5.25]	126.0	[4.96]	387700113	
14	150.0	[5.91]	123.83	[4.875]	142.9	[5.63]	135.6	[5.34]	387700114	
15	159.5	[6.28]	133.35	[5.250]	152.4	[6.00]	145.1	[5.71]	387700115	
16	169.0	[6.66]	142.88	[5.625]	161.9	[6.38]	154.6	[6.09]	387700116	
17	178.6	[7.03]	152.40	[6.000]	171.5	[6.75]	164.1	[6.46]	387700117	
18	188.1	[7.41]	161.93	[6.375]	181.0	[7.13]	173.7	[6.84]	387700118	
19	197.6	[7.78]	171.45	[6.750]	190.5	[7.50]	183.2	[7.21]	387700119	
20	207.1	[8.16]	180.98	[7.125]	200.0	[7.88]	192.7	[7.59]	387700120	
21	216.7	[8.53]	190.50	[7.500]	209.6	[8.25]	202.2	[7.96]	387700121	
22	226.2	[8.91]	200.03	[7.875]	219.1	[8.63]	211.8	[8.34]	387700122	
23	235.7	[9.28]	209.55	[8.250]	228.6	[9.00]	221.3	[8.71]	387700123	
24	245.2	[9.66]	219.08	[8.625]	238.1	[9.38]	230.8	[9.09]	387700124	387790335
25	254.2	[10.03]	228.60	[9.000]	247.7	[9.75]	240.3	[9.46]	387700125	
26	264.3	[10.41]	238.13	[9.375]	257.2	[10.13]	249.9	[9.84]	387700126	
27	273.8	[10.78]	247.65	[9.750]	266.7	[10.50]	259.4	[10.21]	387700127	
28	283.3	[11.16]	257.18	[10.125]	276.2	[10.88]	268.9	[10.59]	387700128	
29	292.9	[11.53]	266.70	[10.500]	285.8	[11.25]	278.4	[10.96]	387700129	
30	302.4	[11.91]	276.23	[10.875]	295.3	[11.63]	288.0	[11.34]	387700130	

TOLERANCES			
MM	TOL	INCH	TOL
0-6	±0.25	0-.24	±.010
>6-30	±0.40	.24-1.18	±.016
>30-120	±0.50	1.18-4.76	±.020
>120	±0.80	>4.76	±.031

FUNCTIONAL SYMBOLS
E/A = 0
E/C = 0
E/P = 0
DIVISIONAL SYMBOLS

THIS DRAWING CONTAINS INFORMATION THAT IS PROPRIETARY TO MOLEX ELECTRONIC TECHNOLOGIES, LLC AND SHOULD NOT BE USED WITHOUT WRITTEN PERMISSION

DIMENSION UNITS: MM/INCH
SCALE: 2:1

GENERAL TOLERANCES (UNLESS SPECIFIED)

	MM	INCH
4 PLACES	± ---	± ---
3 PLACES	± ---	± SEE CHART
2 PLACES	± SEE CHART	± SEE CHART
1 PLACE	± SEE CHART	± ---
0 PLACES	± ---	± ---
ANGULAR TOL	± ---	

DRAFT WHERE APPLICABLE MUST REMAIN WITHIN DIMENSIONS

CURRENT REV DESC: MIGRATED TO ECTR/NX & ADDED TOLERANCE TABLE

EC NO: 640874
DRWN: ABENJAMINLW 2020/05/15
CHK'D: MBRZOZOWSKI 2020/05/27
APPR: JFMURPHY 2020/07/22

INITIAL REVISION:
DRWN: CYORK 2004/09/27
APPR: grobertson 2004/10/01

THIRD ANGLE PROJECTION | DRAWING: B-SIZE | SERIES: 38770

molex

9.53 [.375] DOUBLE ROW
LOW PROFILE BTS ASSY

PRODUCT CUSTOMER DRAWING

DOCUMENT NUMBER	DOC TYPE	DOC PART	REVISION
SD-38770-001	PSD	001	C2

MATERIAL NUMBER	CUSTOMER	SHEET NUMBER
SEE CHART	GENERAL MARKET	2 OF 2

DOCUMENT STATUS	P1	RELEASE DATE	2020/07/22 13:27:27

FORMAT: Eng-legal-portrait-prod-B
REVISION: E
DATE: 2020/01/14

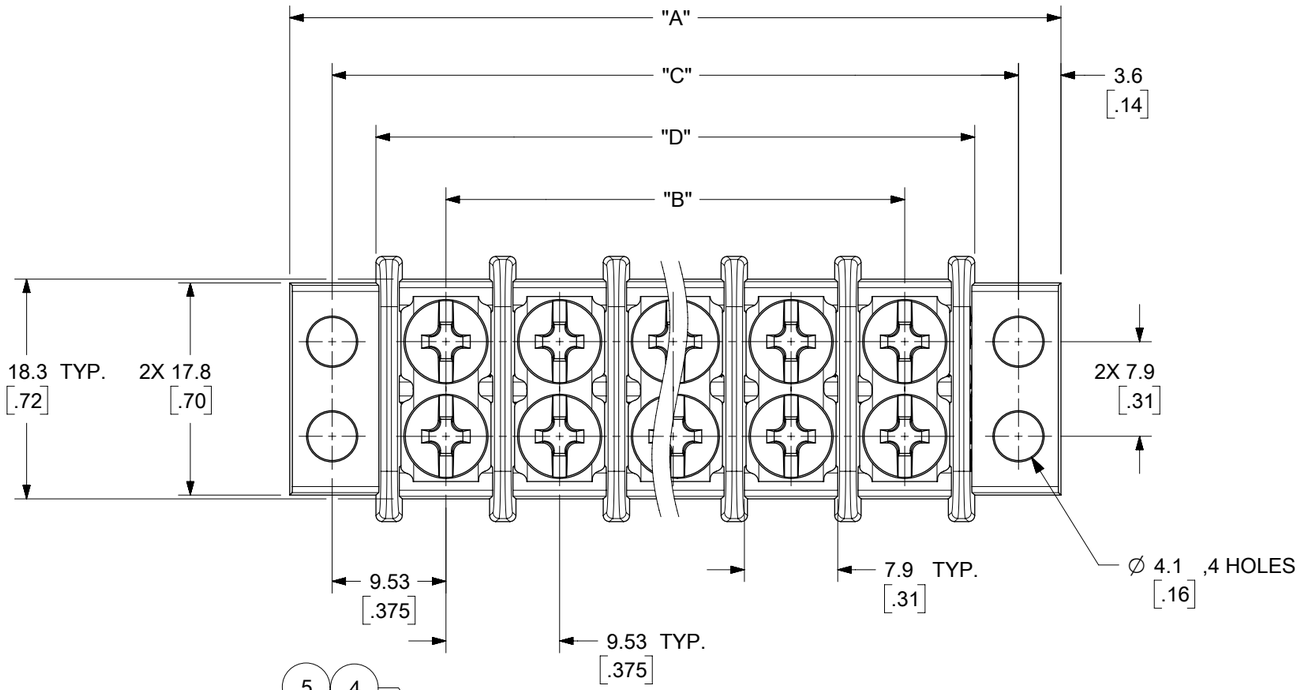

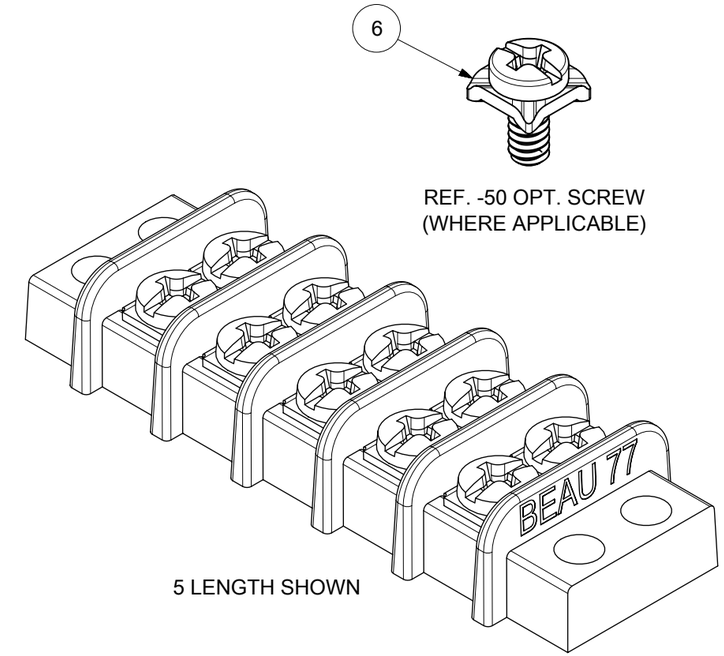

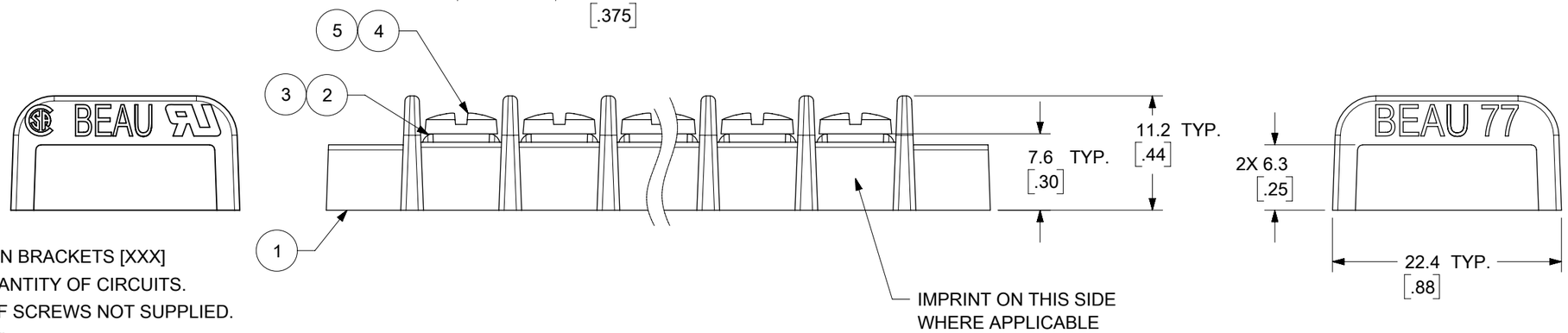

NOTES:

1. MATERIAL: SEE TABLE.
2. FINISHES: SEE TABLE.
3. INCH DIMS ARE SHOWN IN BRACKETS [XXX]
4. "XX" REFERS TO THE QUANTITY OF CIRCUITS.
5. -61 OPTION: ONE ROW OF SCREWS NOT SUPPLIED. SCREW QUANTITY = "XX".
6. -49 OPTION: USE ITEM 3 TERMINAL PLATE, ALL OTHERS USE ITEM 2.
7. -58 OPTION: NO SCREWS SUPPLIED.
8. FOR IMPRINTING (-10A OPTION) SEE SD-38120-001.
9. ALL COMPONENTS ARE ROHS COMPLIANT.

TOLERANCES			
MM	TOL	INCH	TOL
0-6	±0.25	0-.24	±.010
>6-30	±0.40	.24-1.18	±.016
>30-120	±0.50	1.18-4.76	±.020
>120	±0.80	>4.76	±.031

ITEM	QTY.	DESCRIPTION	MATERIAL	FINISH
6	XX*2	SCREW&WASHER, #6-32X.250, PAN, PHIL-SLOT (-50)	STEEL	ZINC W/CHROMATE
5	XX*2	SCREW, #6-32X.250, BHD, PHIL-SLOT (-49)	BRASS	NICKEL PLATE
4	XX*2	SCREW, #6-32X.250, BHD, PHIL-SLOT (STD &-61)	STEEL	ZINC W/CHROMATE
3	XX	TERMINAL PLATE, TIN PLATED (SEE NOTE 6)	BRASS	TIN PLATE
2	XX	TERMINAL PLATE, NICKEL PLATED	BRASS	NICKEL PLATE
1	1	INSULATOR	PBT	BLACK

DOCUMENT STATUS	P1	RELEASE DATE	2023/03/08 16:05:23

FUNCTIONAL SYMBOLS: EA = 0, EC = 0, EP = 0

DIVISIONAL SYMBOLS

THIS DRAWING CONTAINS INFORMATION THAT IS PROPRIETARY TO MOLEX ELECTRONIC TECHNOLOGIES, LLC AND SHOULD NOT BE USED WITHOUT WRITTEN PERMISSION

DIMENSION UNITS: MM/INCH
SCALE: 2:1

GENERAL TOLERANCES (UNLESS SPECIFIED)

	MM	INCH
4 PLACES	± ---	± ---
3 PLACES	± ---	± SEE CHART
2 PLACES	± SEE CHART	± SEE CHART
1 PLACE	± SEE CHART	± ---
0 PLACES	± ---	± ---
ANGULAR TOL	± ---	

DRAFT WHERE APPLICABLE MUST REMAIN WITHIN DIMENSIONS

CURRENT REV DESC: MIGRATED TO ECTR/NX. ADDED THE OPPOSITE END PRODUCT VIEW WITH GRAPHICS.REMOVED OBSOLETED PNS AS PER PCN #512245

EC NO: 741427
DRWN: ABENJAMINLW 2021/07/23
CHK'D: DACHAMMER 2023/03/07
APPR: JFMURPHY 2023/03/08

INITIAL REVISION:
DRWN: CYORK 2006/08/30
APPR: JMACNEIL 2006/08/31

THIRD ANGLE PROJECTION

DRAWING: B-SIZE
SERIES: 38770

molex

9.53 [.375] DOUBLE ROW
LOW PROFILE BTS ASSY

PRODUCT CUSTOMER DRAWING

DOCUMENT NUMBER	DOC TYPE	DOC PART	REVISION
SD-38770-004	PSD	001	B2

MATERIAL NUMBER	CUSTOMER	SHEET NUMBER
SEE SHEET-2	GENERAL MARKET	1 OF 2

NO. OF CIRCUITS "XX"	DIM. "A" mm	DIM. "A" INCH	DIM. "B" mm	DIM. "B" INCH	DIM. "C" mm	DIM. "C" INCH	DIM. "D" mm	DIM. "D" INCH	ASSEMBLY MATERIAL NO. (STANDARD)	ASSEMBLY MATERIAL NO. (-49 OPTION)	ASSEMBLY MATERIAL NO. (-50 OPTION)	ASSEMBLY MATERIAL NO. (-58 OPTION)	ASSEMBLY MATERIAL NO. (-10A OPTION)	ASSEMBLY MATERIAL NO. (-61 OPTION)
2	35.7	[1.41]	9.53	[.375]	28.58	[1.125]	21.3	[.84]	387700102	387700202	387700302	387700402	---	---
3	45.2	[1.78]	19.05	[.750]	38.10	[1.500]	30.8	[1.21]	387700103	387700203	387700303	387700403	387700503	387700603
4	54.7	[2.16]	28.58	[1.125]	47.63	[1.875]	40.3	[1.59]	387700104	---	387700304	387700404	387700504	---
5	64.3	[2.53]	38.10	[1.500]	57.15	[2.250]	49.8	[1.96]	387700105	387700205	387700305	387700405	387700505	---
6	73.8	[2.91]	47.63	[1.875]	66.68	[2.625]	59.4	[2.34]	387700106	387700206	387700306	387700406	387700506	---
7	83.3	[3.28]	57.15	[2.250]	76.20	[3.000]	68.9	[2.71]	387700107	387700207	387700307	387700407	---	---
8	92.8	[3.66]	66.68	[2.625]	85.73	[3.375]	78.4	[3.09]	387700108	---	387700308	387700408	387700508	387700608
9	102.4	[4.03]	76.20	[3.000]	95.25	[3.750]	87.9	[3.46]	387700109	387700209	387700309	387700409	---	387700609
10	111.9	[4.41]	85.73	[3.375]	104.78	[4.125]	97.5	[3.84]	387700110	---	387700310	---	---	---
11	121.4	[4.78]	95.25	[3.750]	114.30	[4.500]	107.0	[4.21]	387700111	---	---	387700411	387700511	387700611
12	130.9	[5.16]	104.78	[4.125]	123.83	[4.875]	116.5	[4.59]	387700112	387700212	387700312	387700412	---	387700612
13	140.5	[5.53]	114.30	[4.500]	133.35	[5.250]	126.0	[4.96]	387700113	---	---	387700413	387700513	387700613
14	150.0	[5.91]	123.83	[4.875]	142.88	[5.625]	135.6	[5.34]	387700114	---	387700314	387700414	---	387700614
15	159.5	[6.28]	133.35	[5.250]	152.40	[6.000]	145.1	[5.71]	387700115	---	---	---	387700515	387700615
16	169.0	[6.66]	142.88	[5.625]	161.93	[6.375]	154.6	[6.09]	387700116	---	387700316	---	---	387700616
17	178.6	[7.03]	152.40	[6.000]	171.45	[6.750]	164.1	[6.46]	---	---	---	---	387700517	387700617
18	188.1	[7.41]	161.93	[6.375]	180.98	[7.125]	173.7	[6.84]	387700118	---	---	---	---	387700618
19	197.6	[7.78]	171.45	[6.750]	190.50	[7.500]	183.2	[7.21]	---	---	---	---	387700519	387700619
20	207.1	[8.16]	180.98	[7.125]	200.03	[7.875]	192.7	[7.59]	387700120	---	387700320	---	---	387700620
21	216.7	[8.53]	190.50	[7.500]	209.55	[8.250]	202.2	[7.96]	---	---	---	---	387700521	387700621
22	226.2	[8.91]	200.03	[7.875]	219.08	[8.625]	211.8	[8.34]	387700122	---	---	---	387700522	387700622
23	235.7	[9.28]	209.55	[8.250]	228.60	[9.000]	221.3	[8.71]	---	---	---	---	387700523	387700623
24	245.2	[9.66]	219.08	[8.625]	238.13	[9.375]	230.8	[9.09]	387700124	---	---	---	387700524	387700624
25	254.2	[10.03]	228.60	[9.000]	247.65	[9.750]	240.3	[9.46]	---	---	---	---	387700525	387700625
26	264.3	[10.41]	238.13	[9.375]	257.18	[10.125]	249.9	[9.84]	---	---	---	---	387700526	387700626
27	273.8	[10.78]	247.65	[9.750]	266.70	[10.500]	259.4	[10.21]	---	---	---	---	387700527	387700627
28	283.3	[11.16]	257.18	[10.125]	276.23	[10.875]	268.9	[10.59]	---	---	---	---	---	387700628
29	292.9	[11.53]	266.70	[10.500]	285.75	[11.250]	278.4	[10.96]	---	---	---	---	387700529	387700629
30	302.4	[11.91]	276.23	[10.875]	295.28	[11.625]	288.0	[11.34]	387700130	---	387700330	---	---	387700630

TOLERANCES			
MM	TOL	INCH	TOL
0-6	±0.25	0-.24	±.010
>6-30	±0.40	.24-1.18	±.016
>30-120	±0.50	1.18-4.76	±.020
>120	±0.80	>4.76	±.031

FUNCTIONAL SYMBOLS: E/A = 0; E/C = 0; E/P = 0

DIVISIONAL SYMBOLS

THIS DRAWING CONTAINS INFORMATION THAT IS PROPRIETARY TO MOLEX ELECTRONIC TECHNOLOGIES, LLC AND SHOULD NOT BE USED WITHOUT WRITTEN PERMISSION

DIMENSION UNITS: MM/INCH
SCALE: 2:1

GENERAL TOLERANCES (UNLESS SPECIFIED)

	MM	INCH
4 PLACES	± ---	± ---
3 PLACES	± ---	± SEE CHART
2 PLACES	± SEE CHART	± SEE CHART
1 PLACE	± SEE CHART	± ---
0 PLACES	± ---	± ---
ANGULAR TOL	± ---	

DRAFT WHERE APPLICABLE MUST REMAIN WITHIN DIMENSIONS

CURRENT REV DESC: MIGRATED TO ECTR/NX. ADDED THE OPPOSITE END PRODUCT VIEW WITH GRAPHICS.REMOVED OBSOLETED PNS AS PER PCN #512245

EC NO: 741427
DRWN: ABENJAMINLW 2021/07/23
CHK'D: DACHAMMER 2023/03/07
APPR: JFMURPHY 2023/03/08

INITIAL REVISION:
DRWN: CYORK 2006/08/30
APPR: JMACNEIL 2006/08/31

THIRD ANGLE PROJECTION | DRAWING: B-SIZE | SERIES: 38770

molex

9.53 [.375] DOUBLE ROW
LOW PROFILE BTS ASSY

PRODUCT CUSTOMER DRAWING

DOCUMENT NUMBER	DOC TYPE	DOC PART	REVISION
SD-38770-004	PSD	001	B2

MATERIAL NUMBER	CUSTOMER	SHEET NUMBER
SEE CHART	GENERAL MARKET	2 OF 2

DOCUMENT STATUS	P1	RELEASE DATE	2023/03/08 16:05:23

FORMAT: Eng-lega-portrait-prod-B
REVISION: E
DATE: 2020/01/14

NO. OF CIRCUITS	DIM. "A" mm	DIM. "A" in	DIM. "B" mm	DIM. "B" in	DIM. "C" mm	DIM. "C" in	DIM. "D" mm	DIM. "D" in	ASSEMBLY MATERIAL NO. (STANDARD)	ASSEMBLY MATERIAL NO. (-49 OPTION)	ASSEMBLY MATERIAL NO. (-50 OPTION)	ASSEMBLY MATERIAL NO. (-58 OPTION)	ASSEMBLY MATERIAL NO. (-10A OPTION)	ASSEMBLY MATERIAL NO. (-61 OPTION)
02	35.7	1.41	9.53	0.375	28.58	1.125	21.3	0.84	38770-0102	38770-0202	38770-0302	38770-0402	38770-0502	38770-0602
03	45.2	1.78	19.05	0.750	38.10	1.500	30.8	1.21	38770-0103	38770-0203	38770-0303	38770-0403	38770-0503	38770-0603
04	54.7	2.16	28.58	1.125	47.63	1.875	40.3	1.59	38770-0104	38770-0204	38770-0304	38770-0404	38770-0504	38770-0604
05	64.3	2.53	38.10	1.500	57.15	2.250	49.8	1.96	38770-0105	38770-0205	38770-0305	38770-0405	38770-0505	38770-0605
06	73.8	2.91	47.63	1.875	66.68	2.625	59.4	2.34	38770-0106	38770-0206	38770-0306	38770-0406	38770-0506	38770-0606
07	83.3	3.28	57.15	2.250	76.20	3.000	68.9	2.71	38770-0107	38770-0207	38770-0307	38770-0407	38770-0507	38770-0607
08	92.8	3.66	66.68	2.625	85.73	3.375	78.4	3.09	38770-0108	38770-0208	38770-0308	38770-0408	38770-0508	38770-0608
09	102.4	4.03	76.20	3.000	95.25	3.750	87.9	3.46	38770-0109	38770-0209	38770-0309	38770-0409	38770-0509	38770-0609
10	111.9	4.41	85.73	3.375	104.78	4.125	97.5	3.84	38770-0110	38770-0210	38770-0310	38770-0410	38770-0510	38770-0610
11	121.4	4.78	95.25	3.750	114.30	4.500	107.0	4.21	38770-0111	38770-0211	38770-0311	38770-0411	38770-0511	38770-0611
12	130.9	5.16	104.78	4.125	123.83	4.875	116.5	4.59	38770-0112	38770-0212	38770-0312	38770-0412	38770-0512	38770-0612
13	140.5	5.53	114.30	4.500	133.35	5.250	126.0	4.96	38770-0113	38770-0213	38770-0313	38770-0413	38770-0513	38770-0613
14	150.0	5.91	123.83	4.875	142.88	5.625	135.6	5.34	38770-0114	38770-0214	38770-0314	38770-0414	38770-0514	38770-0614
15	159.5	6.28	133.35	5.250	152.40	6.000	145.1	5.71	38770-0115	38770-0215	38770-0315	38770-0415	38770-0515	38770-0615
16	169.0	6.66	142.88	5.625	161.93	6.375	154.6	6.09	38770-0116	38770-0216	38770-0316	38770-0416	38770-0516	38770-0616
17	178.6	7.03	152.40	6.000	171.45	6.750	164.1	6.46	38770-0117	38770-0217	38770-0317	38770-0417	38770-0517	38770-0617
18	188.1	7.41	161.93	6.375	180.89	7.125	173.7	6.84	38770-0118	38770-0218	38770-0318	38770-0418	38770-0518	38770-0618
19	197.6	7.78	171.45	6.750	190.50	7.500	183.2	7.21	38770-0119	38770-0219	38770-0319	38770-0419	38770-0519	38770-0619
20	207.1	8.16	180.89	7.125	200.03	7.875	192.7	7.59	38770-0120	38770-0220	38770-0320	38770-0420	38770-0520	38770-0620
21	216.7	8.53	190.50	7.500	209.55	8.250	202.2	7.96	38770-0121	38770-0221	38770-0321	38770-0421	38770-0521	38770-0621
22	226.2	8.91	200.03	7.875	219.08	8.625	211.8	8.34	38770-0122	38770-0222	38770-0322	38770-0422	38770-0522	38770-0622
23	235.7	9.28	209.55	8.250	228.60	9.000	221.3	8.71	38770-0123	38770-0223	38770-0323	38770-0423	38770-0523	38770-0623
24	245.2	9.66	219.08	8.625	238.13	9.375	230.8	9.09	38770-0124	38770-0224	38770-0324	38770-0424	38770-0524	38770-0624
25	254.8	10.03	228.60	9.000	247.65	9.750	240.3	9.46	38770-0125	38770-0225	38770-0325	38770-0425	38770-0525	38770-0625
26	264.3	10.41	238.13	9.375	257.18	10.125	249.9	9.84	38770-0126	38770-0226	38770-0326	38770-0426	38770-0526	38770-0626
27	273.8	10.78	427.65	9.750	266.70	10.500	259.4	10.21	38770-0127	38770-0227	38770-0327	38770-0427	38770-0527	38770-0627
28	283.3	11.16	257.18	10.125	276.23	10.875	268.9	10.59	38770-0128	38770-0228	38770-0328	38770-0428	38770-0528	38770-0628
29	292.9	11.53	266.70	10.500	285.75	11.250	278.4	10.96	38770-0129	38770-0229	38770-0329	38770-0429	38770-0529	38770-0629
30	302.4	11.91	276.23	10.875	295.28	11.625	288.0	11.34	38770-0130	38770-0230	38770-0330	38770-0430	38770-0530	38770-0630

TOLERANCES			
MM	TOL	INCH	TOL
0-6	±0.25	0-.24	±.010
>6-30	±0.40	.24-1.18	±.016
>30-120	±0.50	1.18-4.76	±.020
>120	±0.80	>4.76	±.031

RPM T201844875
EC NO: IPG2018-0437
DRWN:ABENJAMINLW 2018/03/21
CH'KD:
APPR:TWOLDEGEBRIE2018/03/23
DESCRIPTION
B1
REV

QUALITY SYMBOLS
▼=0
Ⓒ=0

GENERAL TOLERANCES (UNLESS SPECIFIED)

	mm	INCH
4 PLACES	± ---	± ---
3 PLACES	± ---	± ---
2 PLACES	± ---	± ---
1 PLACE	± ---	± ---
ANGULAR ±---°		

DRAFT WHERE APPLICABLE MUST REMAIN WITHIN DIMENSIONS

DIMENSION STYLE: MM/IN
SCALE: 2:1
DESIGN UNITS: INCH
THIRD ANGLE PROJECTION

DRAWN BY: C. YORK DATE: 2006/08/11
CHECKED BY: J. MACNEIL DATE: 2006/08/11
APPROVED BY: R. DEROSS DATE: 2006/08/11

TITLE: 9.53 [.375] DOUBLE ROW LOW PROFILE BTS ASSY

molex MOLEX INCORPORATED

MATERIAL NO.: SEE CHART
DOCUMENT NO.: SD-38770-004
SHEET NO.: 2 OF 2
SIZE: B

THIS DRAWING CONTAINS INFORMATION THAT IS PROPRIETARY TO MOLEX INCORPORATED AND SHOULD NOT BE USED WITHOUT WRITTEN PERMISSION