Fairview Microwave
RF COMPONENTS ON DEMAND. Done!

SA75DFDM50W-30
DATA SHEET

30 dB Fixed Attenuator 7/16 Female To 7/16 Male Directional Up To 7.5 GHz Rated To 50 Watts With Black Aluminum Heatsink Body

Electrical Specifications*

Description	Min	Typ	Max	Units
Frequency Range	DC		7.5	GHz
Impedance		50		Ohms
Attenuation Value		30		dB
Input Power			50	Watts
Peak Power			500	Watts
VSWR			1.45:1	

* Values at 25°C, sea level

Specifications by Frequency

Description	F1	F2	F3	F4	F5	Units
Range	DC to 6	6 to 7.5				GHz
VSWR	1.3:1	1.45:1				
Atten. Accuracy	± 0.75	± 1				dB

Features:

- Design: Fixed, Directional Attenuator
- Connector 1: 7/16 DIN Female
- Connector 2: 7/16 DIN Male
- Body Material and Plating: Black Anodized Aluminum Heatsink

Mechanical Specifications

Temperature

Operating Range -55 to +125 deg C

Size

Length 4.01 in [101.85 mm]
Width 3 in [76.2 mm]
Height 3 in [76.2 mm]

Weight 1.796 lbs [814.65 g]

Connectors

Description	Connector 1	Connector 2
Type	7/16 DIN Female	7/16 DIN Male
Contact Material & Plating	Brass, Silver	Brass, Silver
Outer Conductor Material & Plating		Brass, Silver
Hex Size	11/16 In.	11/16 In.
Body Material & Plating	Brass, Silver	Brass, Silver

Compliance Certifications (visit www.FairviewMicrowave.com for current document)

Plotted and Other Data

Notes:

- Values at 25 °C, sea level
- OUTPUT PORT HANDLES 5 WATTS MAX POWER

Fairview Microwave
1130 Junction Dr. #100
Allen, TX 75013
Tel: 1-800-715-4396 / (972) 649-6678
Fax: (972) 649-6689
www.fairviewmicrowave.com
sales@fairviewmicrowave.com

Copyright © 2014

30 dB Fixed Attenuator 7/16 Female To 7/16 Male Directional Up To 7.5 GHz Rated To 50 Watts With Black Aluminum Heatsink Body from Fairview Microwave is in-stock and available to ship same-day. All of our RF/microwave products are available off-the-shelf from our ISO 9001:2008 certified facilities in Allen, Texas. Fairview Microwave is RF on-demand.

For additional information on this product, please click the following link: 30 dB Fixed Attenuator 7/16 Female To 7/16 Male Directional Up To 7.5 GHz Rated To 50 Watts With Black Aluminum Heatsink Body SA75DFDM50W-30

URL: http://www.fairviewmicrowave.com/30db-fixed-attenuator-7-16-female-7-16-male-50-watts-sa75dfdm50w-30-p.aspx

The information contained in this document is accurate to the best of our knowledge and representative of the part described herein. It may be necessary to make modifications to the part and/or the documentation of the part, in order to implement improvements. Fairview Microwave reserves the right to make such changes as required. Unless otherwise stated, all specifications are nominal. Fairview Microwave does not make any representation or warranty regarding the suitability of the part described herein for any particular purpose, and Fairview Microwave does not assume any liability arising out of the use of any part or documentation.

Add to end of part number	
- yy =	Attenuation
- 03	3 dB
- 06	6 dB
- 10	10 dB
- 20	20 dB
- 30	30 dB
- 40	40 dB
- 50	50 dB
- 60	60 dB

Part Number Configuration		
Part Number	Input Connector	Output Connector
SA75DFDM50W	7/16 Female	7/16 Male
SA75DMDF50W	7/16 Male	7/16 Female
SA75DFDF50W	7/16 Female	7/16 Female
SA18NFNM50W	N Female	N Male
SA18NMNF50W	N Male	N Female
SA18NFNF50W	N Female	N Female
SA18SFSM50W	SMA Female	SMA Male
SA18SMSF50W	SMA Male	SMA Female
SA18SFSF50W	SMA Female	SMA Female
SA18TFTM50W	TNC Female	TNC Male
SA18TMTF50W	TNC Male	TNC Female
SA18TFTF50W	TNC Female	TNC Female

Table of Information	
Connector Type	DIM "A" (REF.)
SMA Male	0.7800
SMA Female	0.6300
TNC Male	0.9600
TNC Female	1.0600
N Female	1.0900
N Male	1.1300
7/16 Male	1.2800
7/16 Female	1.3200

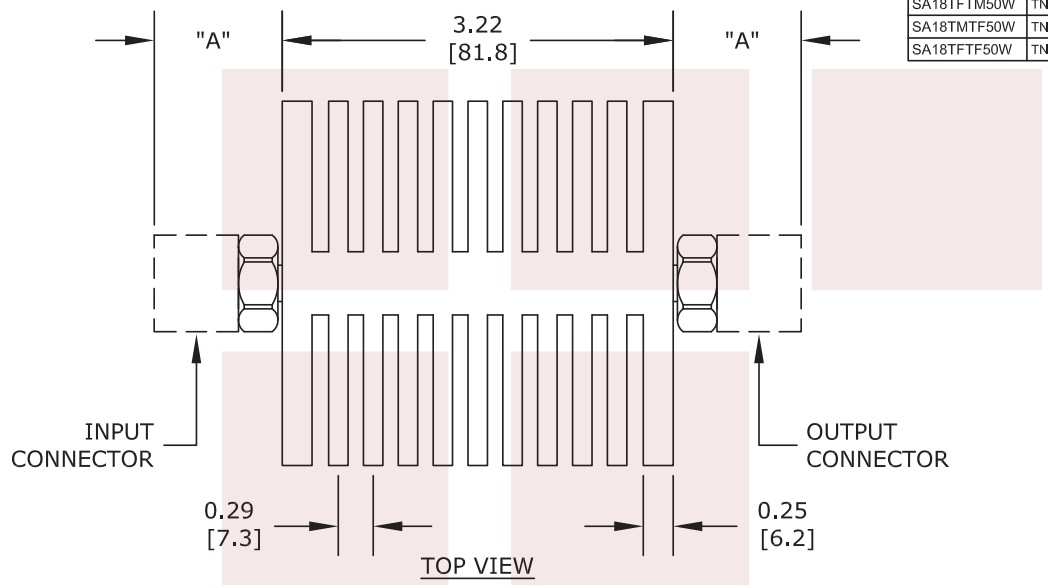

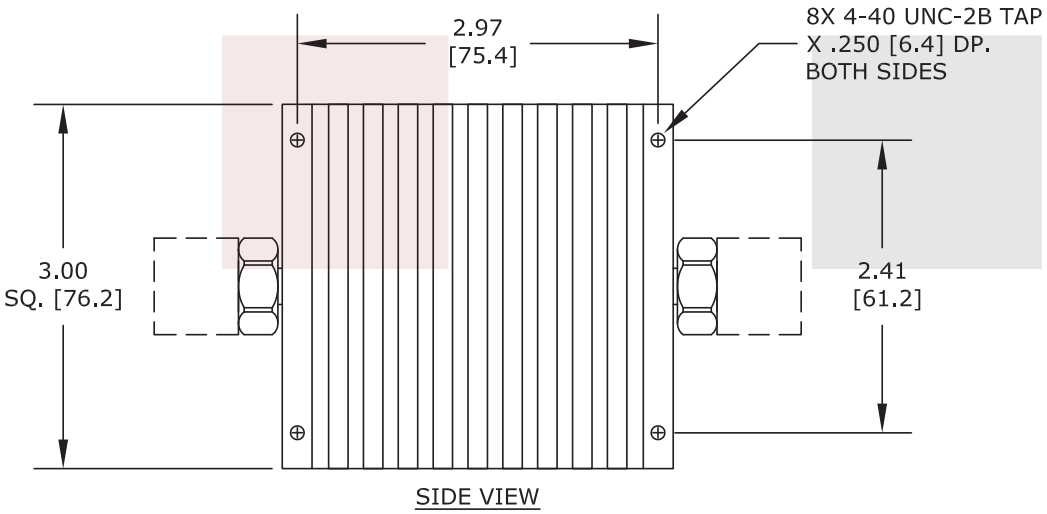

FAIRVIEW MICROWAVE INC. ALLEN, TX 75013 WWW.FAIRVIEWMICROWAVE.COM	NOTES: 1. UNLESS OTHERWISE SPECIFIED ALL DIMENSIONS ARE NOMINAL. 2. ALL SPECIFICATIONS ARE SUBJECT TO CHANGE WITHOUT NOTICE AT ANY TIME. 3. DIMENSIONS ARE IN INCHES [mm].
TITLE 30 dB Fixed Attenuator 7/16 Female To 7/16 Male Directional Up To 7.5 GHz Rated To 50 Watts With Black Aluminum Heatsink Body	DWG NO SA18XXXX50w-yy CAGE CODE 3FKR5 CAD FILE 063014 SHEET SCALE N/A SIZE A 2233

1130 Junction Dr. #100 Allen, TX 75013 | Tel: 1-800-715-4396 / (972) 649-6678 / Fax: (972) 649-6689

Copyright © 2014