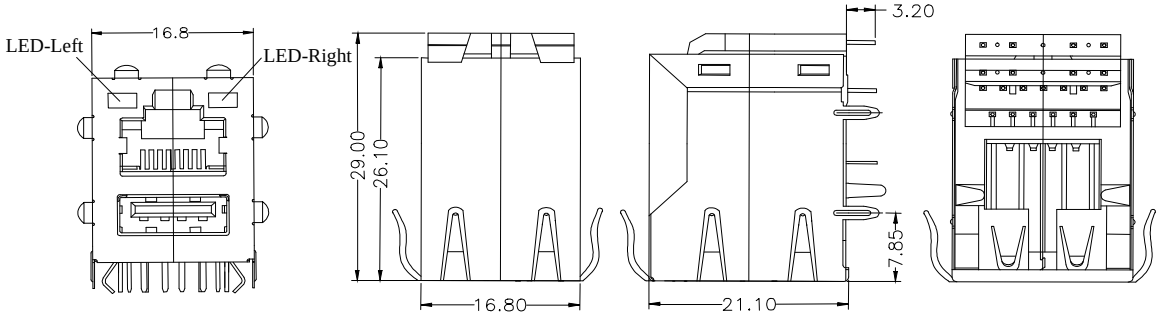

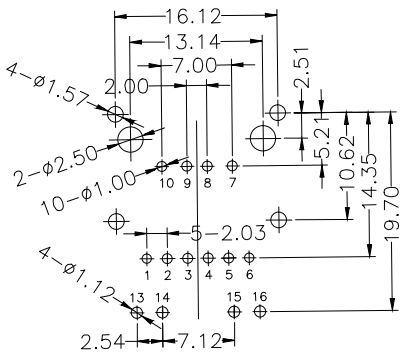

Suggested PCB Layout(Component side view)

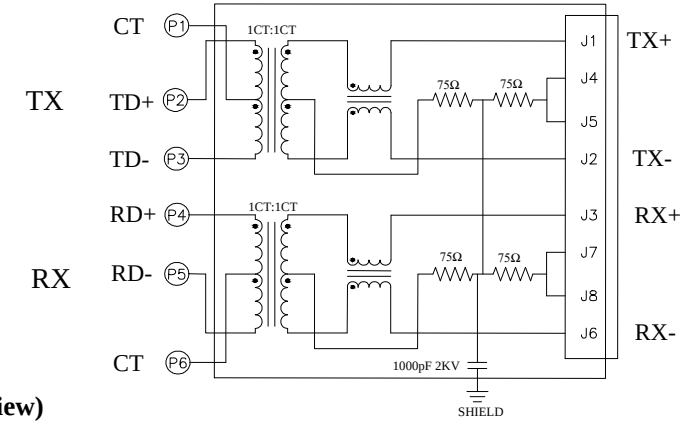

Feature:

. Complies with IEEE standards and all 10/100 Ethernet specificatons including 350uH with 8mA DC bias
. Contact: Phosphor Bronze, 6u-inch gold flashed unless specified
. Single port shield RJ45 with single USB2.0 AF
. Housing: Thermoplastic PBT+30%GF UL94V0 rated
. Operating temperature: 0 °C to 70 °C
. Storage temperature: -40 °C to 85 °C

Electrical Specifications: (25 °C)

1. Turns Ratio:
   TX & Rx= 1:1 ±5%
2. Insertion Loss:
   @1~80MHz : -1.0dB Max
   @ 100MHz:-1.5dB Max
3. Return Loss:
   @1~30MHz : -20dB Min
   @ 60~80MHz : -12dB Min
4. Common Mode Rejection:
   @1~100MHz: -30dB Min
   @200MHz: -20dB Min
5. Crosstalk:
   @1~100MHz : -35dB Min
6. OCL:
   @100KHz, 0.1V , 8mADC : 350uH Min
7. Hi-Pot : 1200V AC, 1mA, 1Sec

ORDER CODE: A-MJU-8-DA-xTP-Sxxx

K:Gold flash selective tin
P: Au15μ" selective tin
H: Au30μ" selective tin

GG1: LEFT LED: Green，RIGHT LED: Green
CG1: LEFT LED: Green/Yellow，RIGHT LED: Green/Yellow
CG2: LEFT LED: Green/Orange，RIGHT LED: Yellow

RoHS compliant
Unit: mm

Scale	Free
TOLERANCE	
X.X	±0.38
X.XX	±0.25
X.XXX	±0.13
DIM	TOL
Angle	TOL

Id.	Modification	Date	Name
0	Drawn	06.01.2022	Luca

	Date	Name
Drawn	06.01.2022	Luca
Approved	06.01.2022	Luca

ASSMANN WSW components

Description: Modular Connector
RJ45 Jack + USB2.0 AF

ASSMANN WSW-No.
A-MJU-8-DA-xTP-Sxxx

Drawing-No.
ASS 9195 CO

rev00

Customer-No.

Sheet
1/2

SV4894